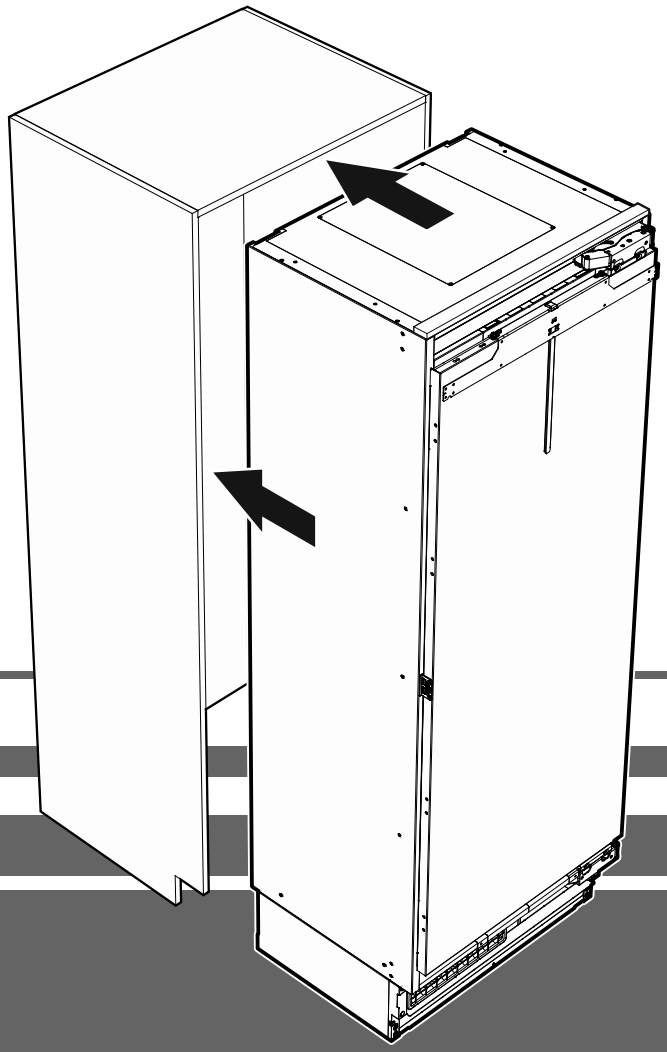

7085 993-02

ERB.. 96.. / ERB.. 97.. / ERB.. 99..

LIEBHERR

Content

Content....2
Please read and follow these instructions....2
Note to the installer....3
Mounting the anti-tipping device....3
Setting up....3
Electrical connection....3
Appliance dimensions....4
Door swing clearance (top view)....4
Installation dimensions....5
Panel dimensions....6
Unpacking....7
Supplied accessories....9
Anti-tipping device....10
Safety instructions and warnings for water connection....12
Water connection requirements....12
Appliance installation....12
Please note in case of removing appliance from the recess....21
Important note for changing over door hinges or limiting the door opening angle to 90°....21
PLEASE READ AND FOLLOW THESE INSTRUCTIONS....22
Changing over door hinges....22

Please read and follow these instructions.

These instructions contain Danger, Warning and Caution notes.

This information is important for safe and efficient installation and operation.

Always read and comply with all Danger, Warning and Caution notes!

⚠ DANGER!

Danger indicates an imminent hazard which will cause serious injury or death if precautions are not followed.

⚠ WARNING!

Warning indicates a hazardous situation which, if not avoided, could result in death or serious injury.

⚠ CAUTION!

Caution indicates a potentially hazardous situation which, if not avoided, may result in minor or moderate injury.

IMPORTANT

This indicates information that is especially relevant to a problem-free installation and operation.

Note to the installer

It is very important to follow the instructions in the manual to ensure proper installation and operation of the appliance.

Before installing the appliance, be sure to thoroughly read and understand all of the information in this manual.

⚠ WARNING!

Risk of electric shock.

Do not connect to the socket before the installation is completed.

Mounting the anti-tipping device

⚠ WARNING!

To avoid a hazard due to instability of the appliance, it must be secured in accordance with the instructions.

Setting up

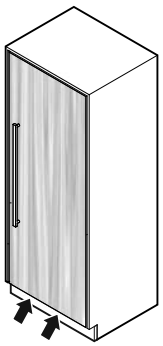

- Do not place the appliance in direct sunlight or near cookers, radiators and similar sources of heat.
- The floor on which the appliance stands should be horizontal and level.
- Do not cover ventilation openings or grilles. →
- The door front must finish at least 102 mm above the floor to guarantee adequate ventilation and air extraction.
- Standard EN 378 specifies that the room in which you install your appliance must have a volume of 1 m^3 per 8 g of R 600a refrigerant used in the appliance, so as to avoid the formation of inflammable gas/air mixtures in the room where the appliance is located in the event of a leak in the refrigerant circuit. The quantity of refrigerant used in your appliance is indicated on the type plate on the inside of the appliance.

Electrical connection

Only operate the appliance with **alternating current (AC)**.

The permissible voltage and frequency are indicated on the type plate. The position of the type plate is shown in the section entitled **Description of the appliance** (Operating instructions).

The socket must be properly earthed and protected by a fuse.

The tripping current of the fuse must be between 10 A and 16 A.

Do not connect the appliance using an extension cable or extension socket.

Do not use stand-alone inverters (conversion of direct current to alternating current/three-phase current) or energy-saving plugs. Risk of damage to the electronic control system!

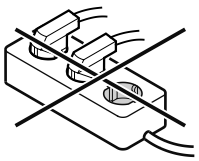

Appliance dimensions

ERB.. 96..

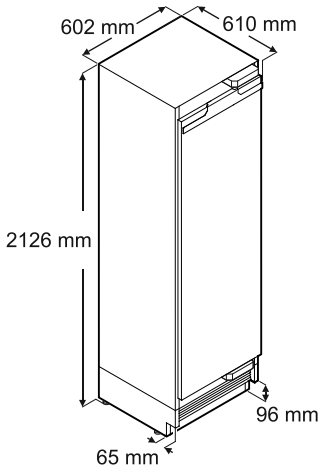

ERB.. 97..

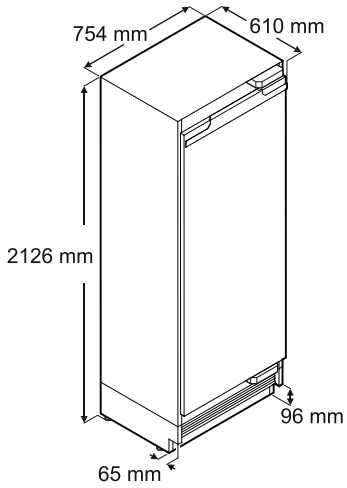

ERB.. 99..

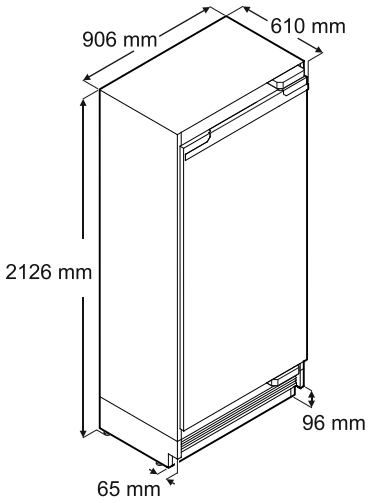

Stated minimum height dimensions include when the adjustable feet are fully inserted.
Width will increase by 6.5 mm when mounting strips are installed.

Door swing clearance (top view)

ERB.. 96..

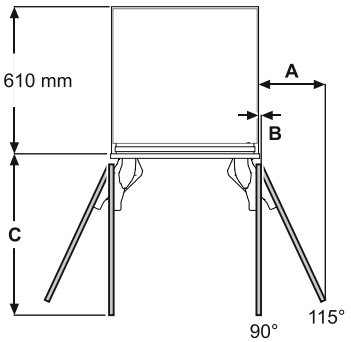

Internal door panel
A = 273 mm
B = 12.5 mm
C = 658 mm

External door panel
A = 279 mm
B = 12.5 mm
C = 670 mm

ERB.. 97..

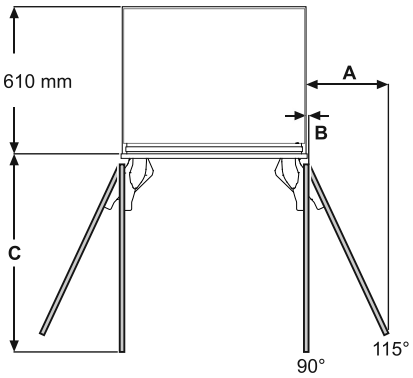

Internal door panel
A = 337 mm
B = 12.5 mm
C = 810 mm

External door panel
A = 343 mm
B = 12.5 mm
C = 822 mm

ERB.. 99..

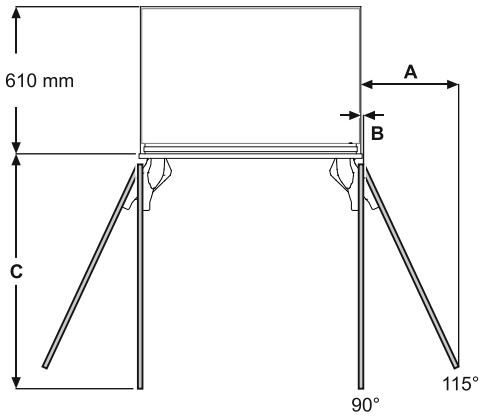

Internal door panel
A = 400 mm
B = 12.5 mm
C = 962 mm

External door panel
A = 406 mm
B = 12.5 mm
C = 975 mm

Dimension A and B: add panel thickness and handle projection to calculate distance to wall.

Installation dimensions

Continuous plinth panel

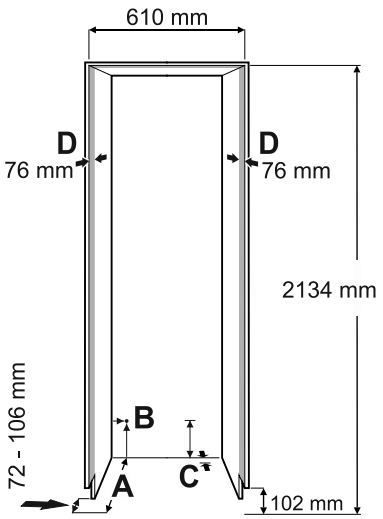

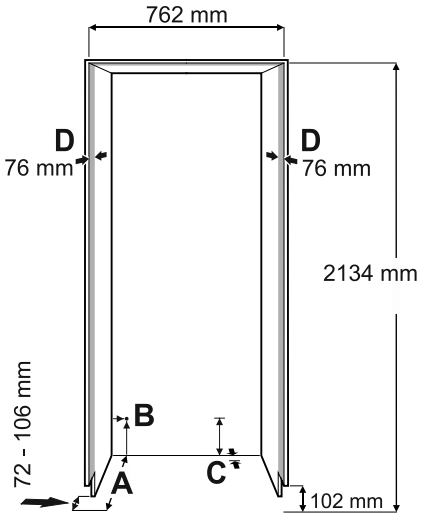

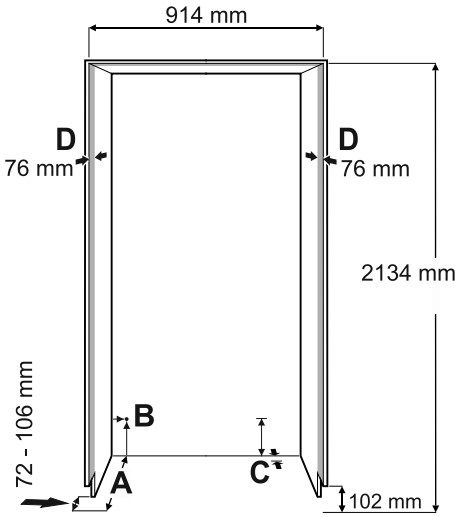

Individual plinth panel

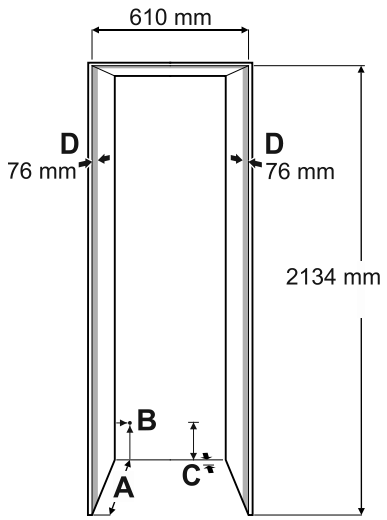

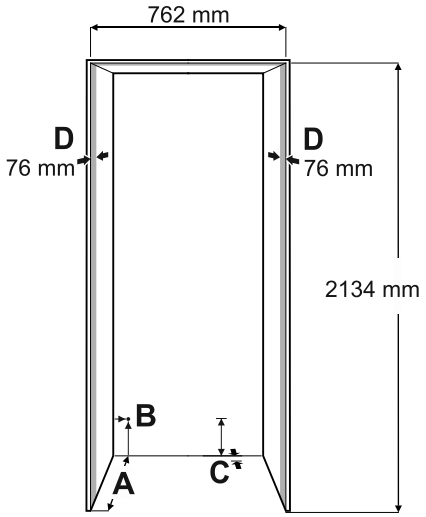

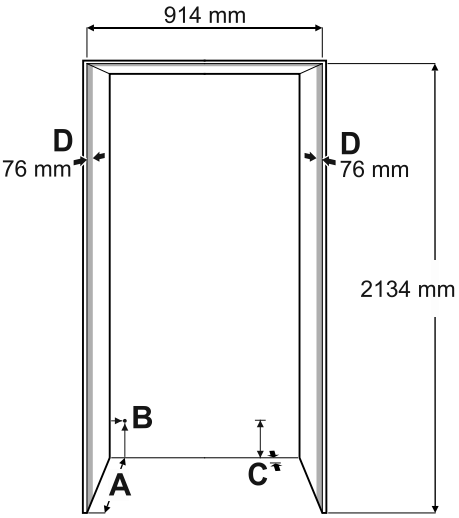

A
Recess depth for external door panel = 635 mm

Recess depth for internal door panel = 635 mm plus panel thickness

B
This is the point where the mains cable exits from the appliance rear. 19 mm from the left and 127 mm from the floor.
Free length of the mains cable is 2.5 m.

IMPORTANT

The socket must be easily accessible so that the appliance can be disconnected from the mains quickly in an emergency. It must not be behind the back of the appliance.

C
The appliance has a recess in this area for cable and water line laying.
25 mm in depth and 140 mm in height over the whole width of the appliance.

D
This surface is visible when the appliance door is open. Designed finish is required.

Panel dimensions

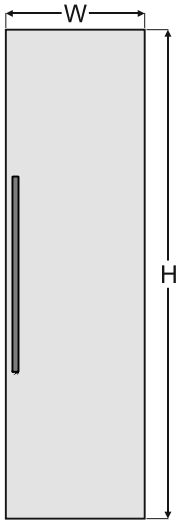

610 mm recess

Internal door panel
H = 2029 mm

W = 603 mm

External door panel
H = 2032 mm plus overlapping of the panel on the top
W = 610 mm plus overlapping of the panel on both sides

Minimum panel thickness = 16 mm*
Maximum panel thickness = 25 mm
Maximum panel weight = 30 kg

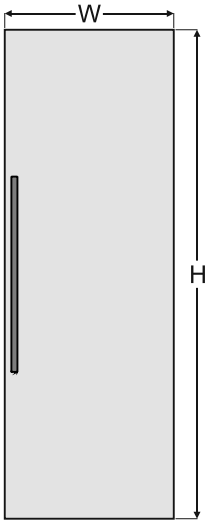

762 mm recess

Internal door panel
H = 2029 mm

W = 756 mm

External door panel
H = 2032 mm plus overlapping of the panel on the top
W = 762 mm plus overlapping of the panel on both sides

Minimum panel thickness = 16 mm*
Maximum panel thickness = 25 mm
Maximum panel weight = 35 kg

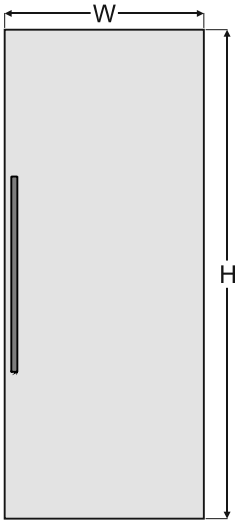

914 mm recess

Internal door panel
H = 2029 mm

W = 908 mm

External door panel
H = 2032 mm plus overlapping of the panel on the top
W = 914 mm plus overlapping of the panel on both sides

Minimum panel thickness = 16 mm*
Maximum panel thickness = 25 mm
Maximum panel weight = 40 kg

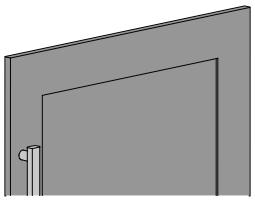

* If a "shaker style" panel is used which undershoots the minimum panel thickness, shorter screws than those supplied in the accessory pack must be used.

Unpacking

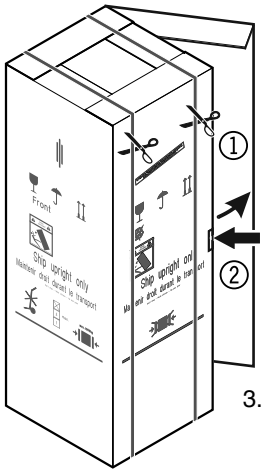

1. Cut the straps and remove them.
2. Press in the lug, tear or cut the carton on the edge and remove it.
3. Remove all polystyrene packing material from the sides and top.

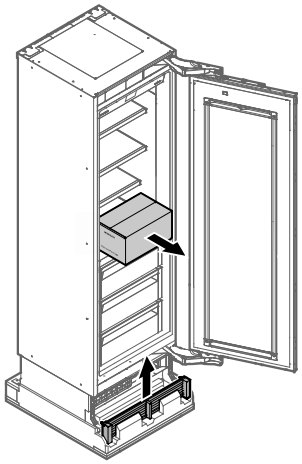

4. Remove the box with mounting accessories.
5. Remove the ventilation grille.

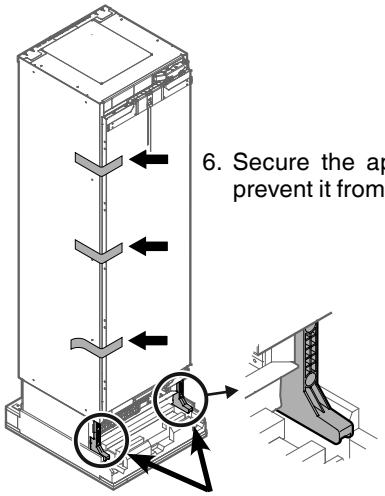

6. Secure the appliance door with tape to prevent it from being opened accidentally.

⚠ DANGER!

Risk of death or serious injury due to appliance tipping over.

Do not remove the transportation safety components before the appliance is in the recess.

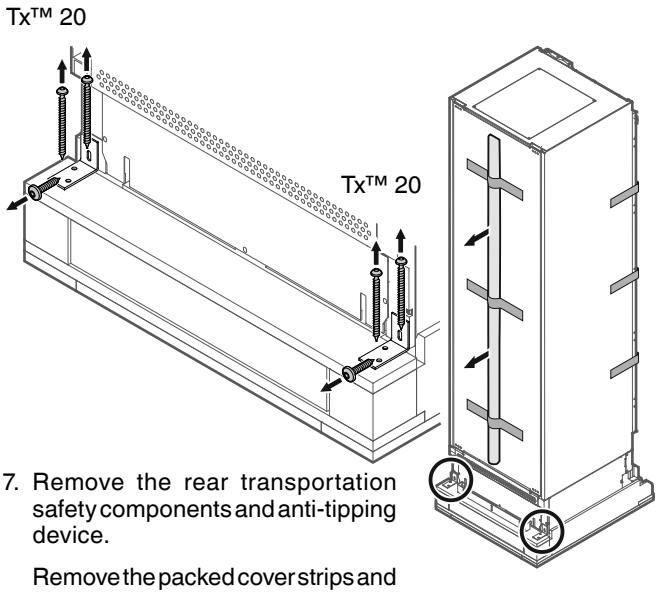

7. Remove the rear transportation safety components and anti-tipping device.

   Remove the packed cover strips and support strips from the appliance rear.

⚠ WARNING!

Risk of injury and damage.

Four people are required to safely remove the appliance from the bottom pallet.

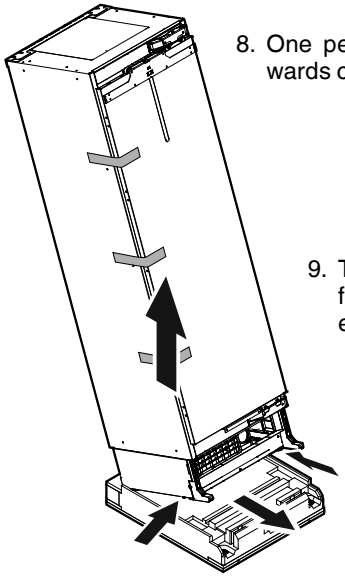

8. One person tilts the appliance backwards carefully and holds it in place.
9. Two people grasp the appliance from the bottom and lift. One on each side.
10. One person removes the pallet.

    Place the appliance carefully on the floor.

Alternative possibility:

Cut off the marked area from the pallet.

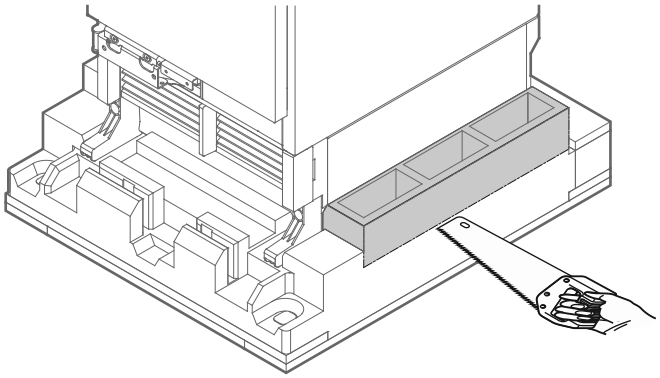

or

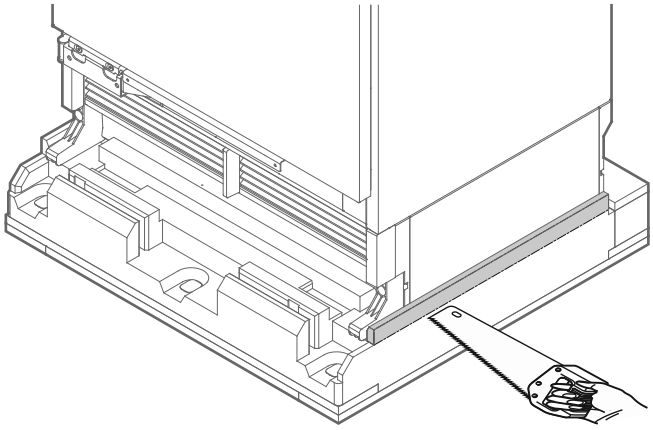

Tilt the appliance slightly sideways.

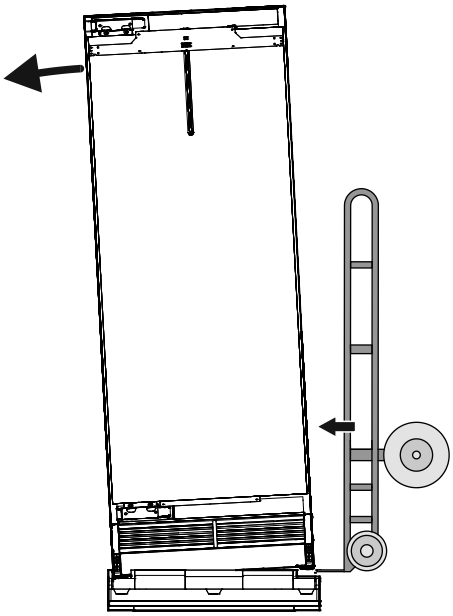

Slide a transport dolly between the appliance and packaging.
Tie the appliance to the dolly with straps.
Tilt the appliance onto the dolly.

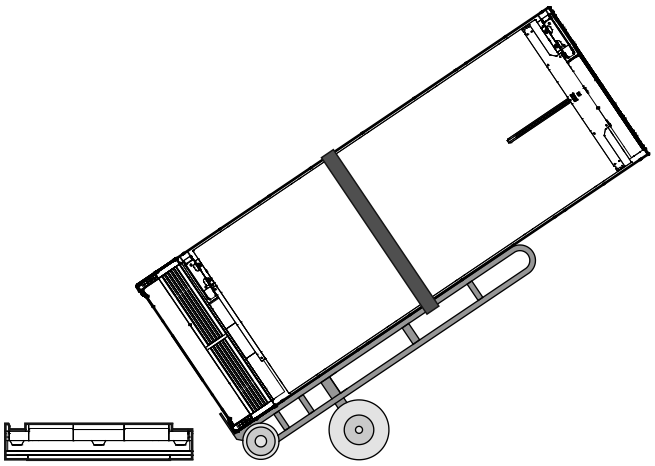

Place the appliance carefully on the floor.

Supplied accessories

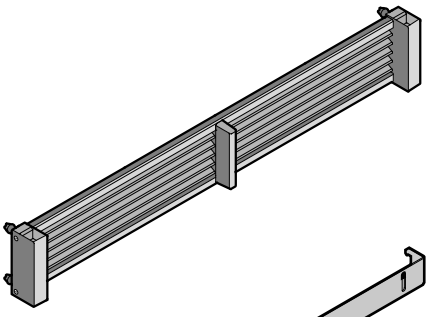

Ventilation grille

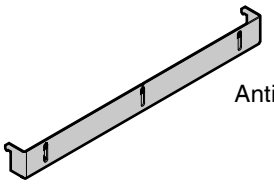

Anti-tipping device

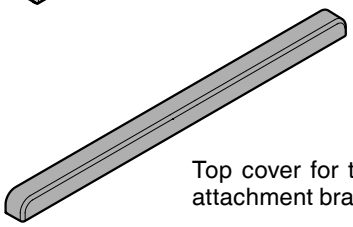

Top cover for the door panel attachment bracket

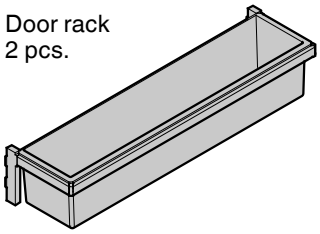

Door rack
2 pcs.

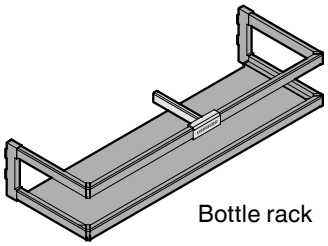

Bottle rack

Cable holder
3 pcs.

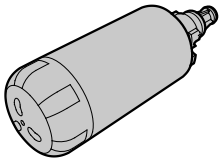

Water filter
(ERB.. 97.. and ERB.. 99.. only)

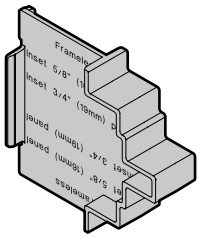

Depth adjustment aid
4 pcs.

Retaining screws for installation

30 pcs.

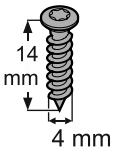

Tx™ 15

8 pcs.

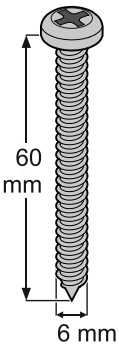

2 pcs.

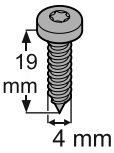

Tx™ 15

20 pcs.

M6 x 12
Tx™ 20

16 pcs.

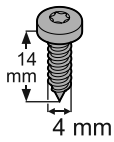

Tx™ 15

20 pcs.

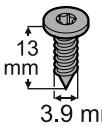

Tx™ 10

Panel support strips

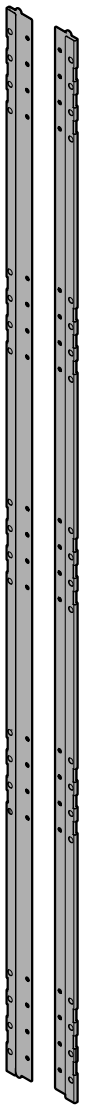

Cover strips for the panel supports

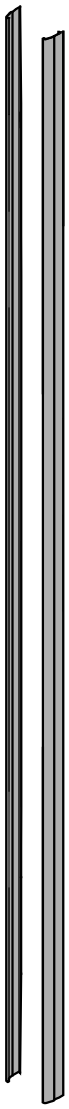

Cover strips for the gap between appliance and recess

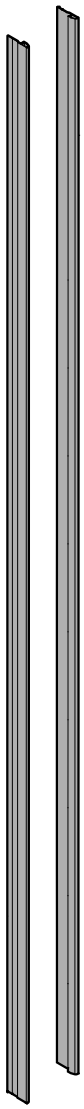

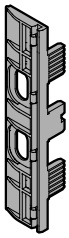

Panel support
10 pcs.

Divider for ventilation duct in the plinth area

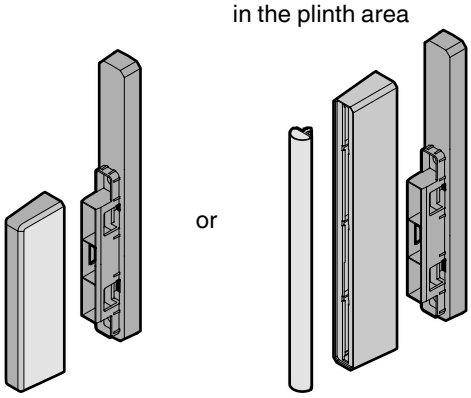

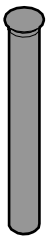

2 pcs.
Opening limiter

Mains cable

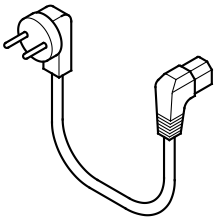

2 pcs.
Replacement sticker for plinth panel assembly

SmartDeviceBox
Includes module for smartphone connectivity

DO NOT DISCARD!
Forward to appliance user!

SmartDevice functions are not available in all countries.

Anti-tipping device

The supplied anti-tipping bracket must be installed in all cases. This prevents the appliance from tipping over when the fully loaded door is opened.

- May only be installed by trained personnel.
- The 6 x 60 mm screws are designed for standard dry walls.
- If the anti-tipping bracket cannot be secured properly using the 6 x 60 mm screws, use suitable anchors or different screws.

Positioning the anti-tipping device - figure 1 - 2

IMPORTANT

Unit depth min. 635 mm

The anti-tipping bracket is fastened to the floor downwards and to the spacer backwards.

⚠ WARNING!

Ensure that the spacer is fastened securely to the floor.

Kitchen unit with internal door panel - figure 1

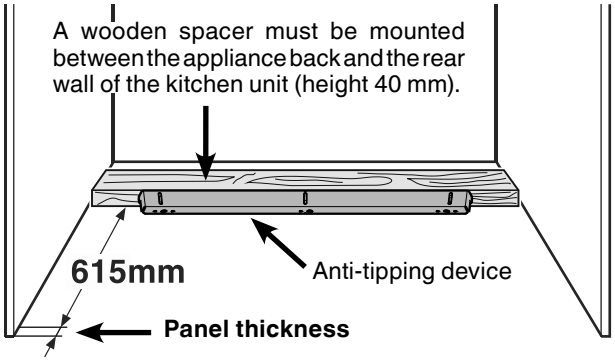

Figure 1

Kitchen unit with external door panel - figure 2

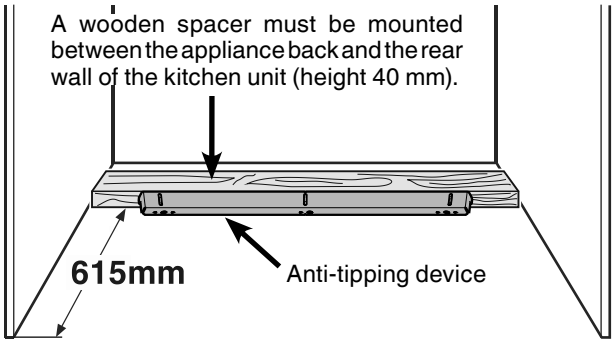

Figure 2

IMPORTANT

If the floor slopes down sideways, the anti-tipping bracket must be fitted horizontally. Put spacers underneath where necessary.

Mounting the anti-tipping device on wooden floors - figure 3

1. Mark the centre line of the appliance on the rear wall. Align the anti-tipping bracket centre to this centre line.

⚠ WARNING!

Ensure that there are no electric cables or water pipes in the wall section to which the anti-tipping bracket is to be secured. These could be damaged by screws or drills during installation.

2. Fasten the anti-tipping bracket to the wooden floor using 5 screws (6 x 60). Drill pilot holes if necessary.
3. Fasten the anti-tipping bracket to the rear wall using 3 screws (6 x 60).

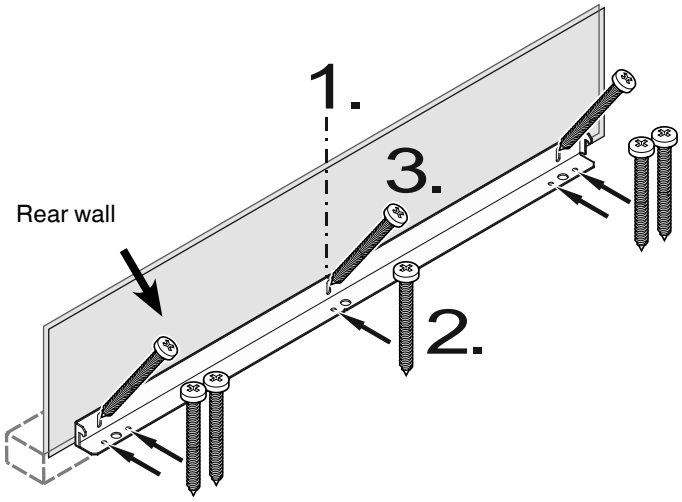

Figure 3

Mounting the anti-tipping device on concrete floors - figure 4 - 5

1. Mark the centre line of the appliance on the rear wall. Align the anti-tipping bracket centre to this centre line.

⚠ WARNING!

Ensure that there are no electric cables or water pipes in the wall section to which the anti-tipping bracket is to be secured. These could be damaged by screws or drills during installation.

2. Drill 10 mm diameter holes in the positions shown in **figure 4** using a carbide drill bit.
   The depth of the holes must exceed the overall length of the anchors.
   Clean the holes after drilling.
3. Fit the washer and screw on the hex nut to the end of each anchor.
   Drive in all three anchors.
   Align the anti-tipping bracket centre to the centre line on the rear wall again.
   Fasten the anchors by turning the hex nut.
4. Fasten the anti-tipping bracket to the rear wall **(figure 5)** using 3 screws (6 x 60).

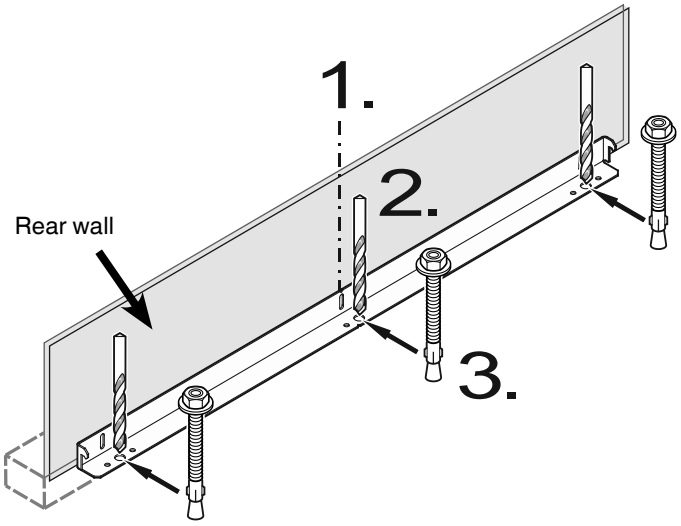

Figure 4

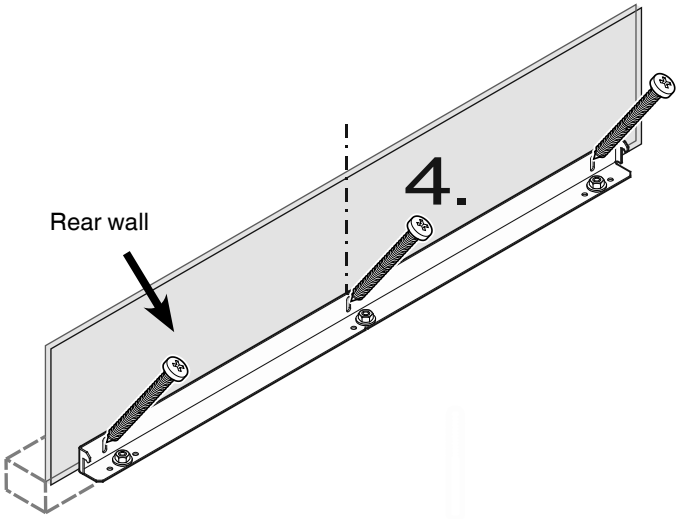

Figure 5

Safety instructions and warnings for water connection

- Do not install the water connection while the appliance is connected to an electrical socket.
- The connection to the mains water supply may only be made by a trained and licensed plumber.

⚠ WARNING!

Connect to potable water supply only.

Water connection requirements

- The water pressure must be in the range of **0.28-0.62 MPa (2.8-6.2 bar)**.

  Failure to meet these requirements may result in water dispenser malfunction and a water leak that can damage flooring and surrounding furniture.

- A shut-off valve must be installed between the water line and the mains water supply. It must be easily accessible so that the water supply can be stopped immediately if necessary.

IMPORTANT

Do not install the shut-off valve behind the appliance.

Models ERB.. 97.. and ERB.. 99.. only

The water supply to the appliance must be through a cold water pipe that can withstand the operating pressure and complies with the hygiene regulations. For this, use the stainless steel hose supplied (length 3 m).

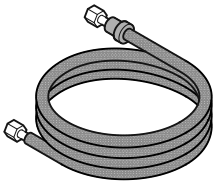

IMPORTANT

Do not use any old or already premounted water supply lines.

Appliance installation

Move the appliance towards the final position and leave enough space to work behind.

Models ERB.. 97.. and ERB.. 99.. only

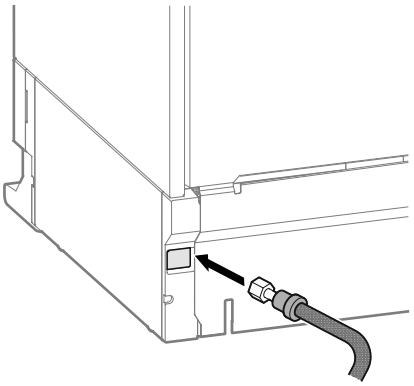

Pull the water line through from the rear to the front.

Models ERB.. 97.. and ERB.. 99.. only

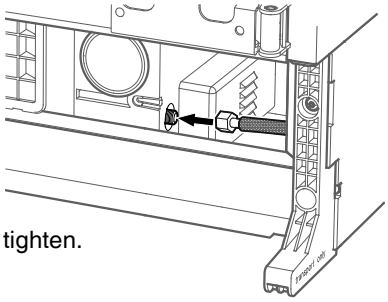

Connect the other end and tighten.

IMPORTANT

Make sure that the connection is fitted with a seal and is tight.

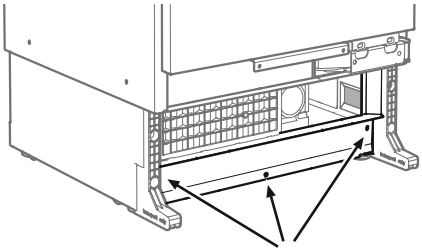

The steel plate can be removed to facilitate connecting the water hose.

Models ERB.. 97.. and ERB.. 99.. only

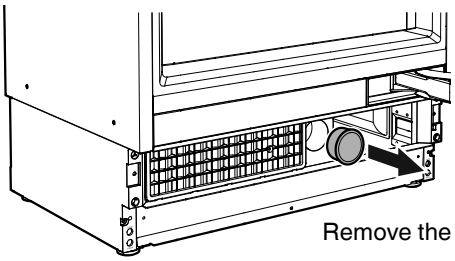

Remove the cover.

Models ERB.. 97.. and ERB.. 99.. only

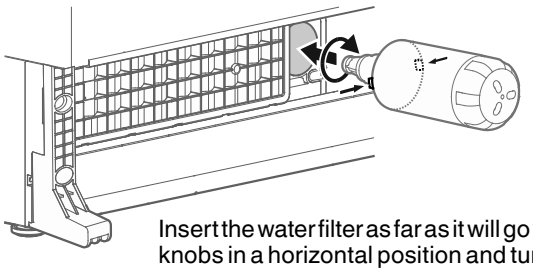

Insert the water filter as far as it will go with the front knobs in a horizontal position and turn clockwise until it snaps in.

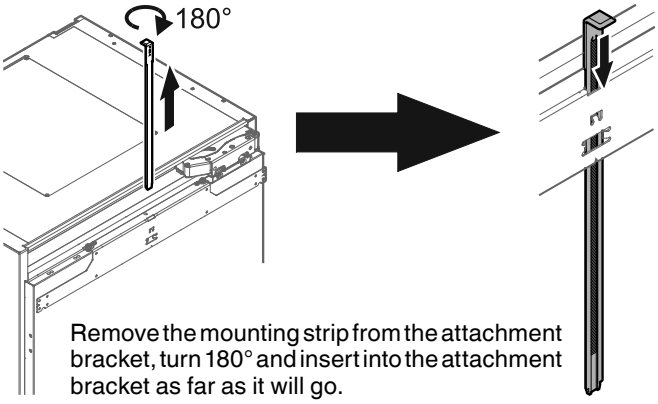

Remove the mounting strip from the attachment bracket, turn 180° and insert into the attachment bracket as far as it will go.

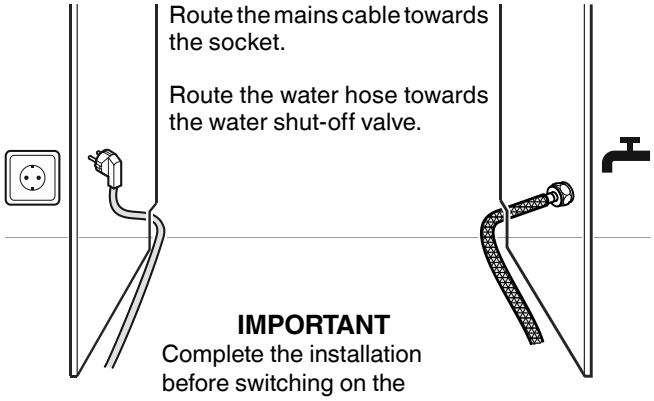

Route the mains cable towards the socket.

Route the water hose towards the water shut-off valve.

IMPORTANT
Complete the installation before switching on the appliance.

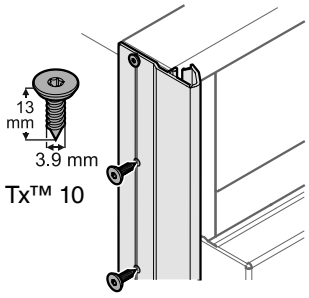

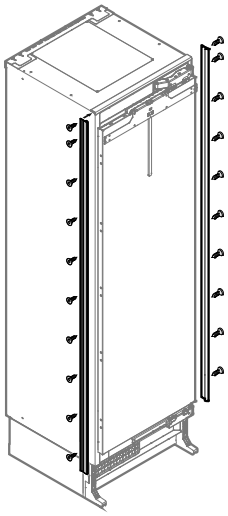

Apply the appliance cover strips to the left and right front edge of the appliance housing, align in height with the appliance top and screw into place. The strip is transparent so that the designed attachment holes on the appliance housing are visible. We recommend that you mark and pre-drill the hole positions in the strip.

IMPORTANT
Use the correct flat-headed screws, otherwise the edges of the kitchen unit will be damaged when sliding the appliance into the recess.

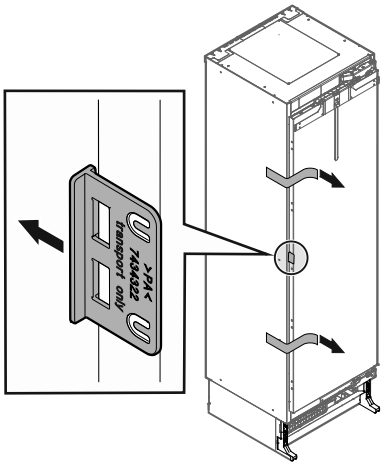

Remove the tapes.

Open the door and remove the transportation safety component.

Mounting the depth adjustment aid into the cover strips

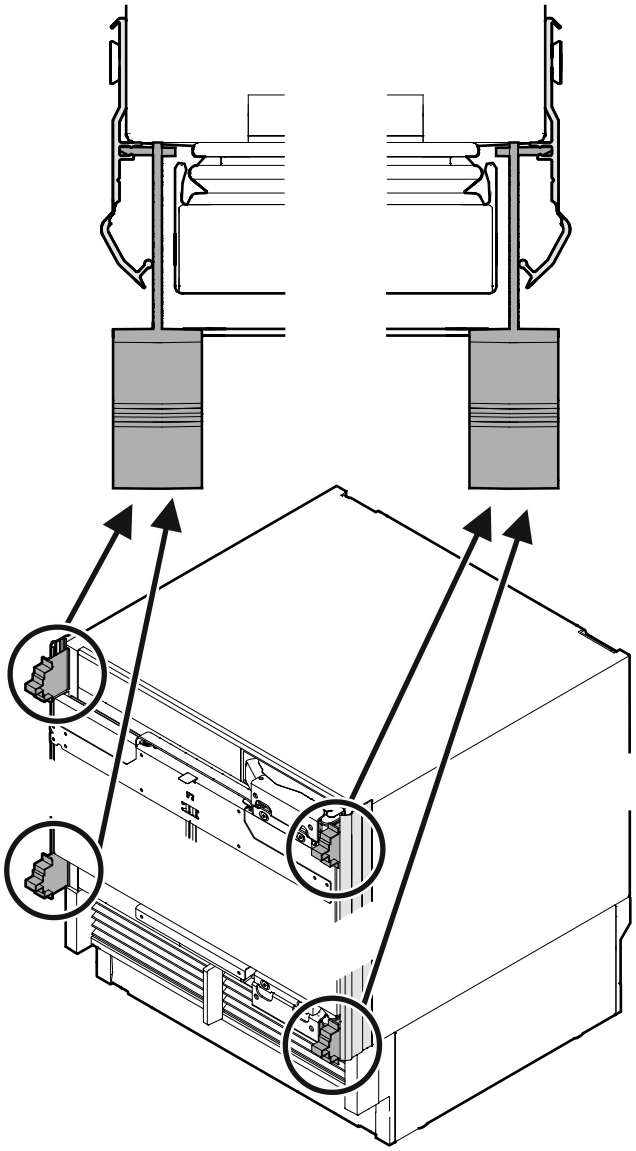

Align the appliance in depth.

X = recess front to appliance housing front (not cover strip)

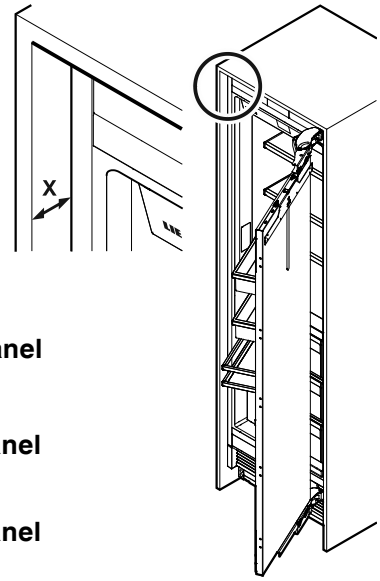

Internal 22 mm door panel

X = 66 mm

Internal 19 mm door panel

X = 63 mm

Internal 16 mm door panel

X = 60 mm

External door panel

X = 44 mm

or

with the depth adjustment aid:
The surface of the depth adjustment aid must be flush with the surface of the recess (example shows 19 mm).

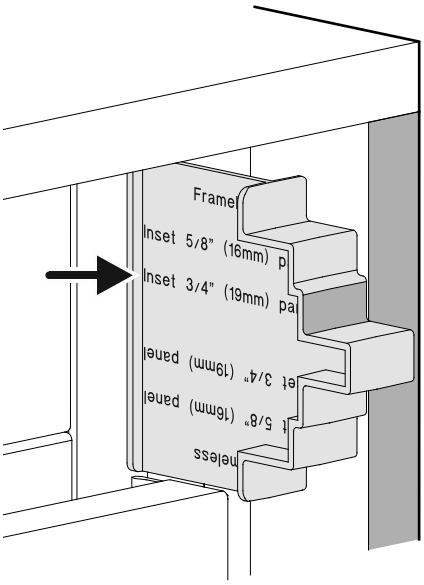

CAUTION!

Mains cable/Water line trapped between anti-tipping device and rear of the appliance. Mains cable/Water line crushed. Install cable holders. Insert mains cable/water line in cable holders.

Slide the appliance into the recess. To avoid damage, pull the mains cable and water line backwards at the same time with slight tension.

IMPORTANT

These steps are only necessary if the socket or water line are on the opposite side.

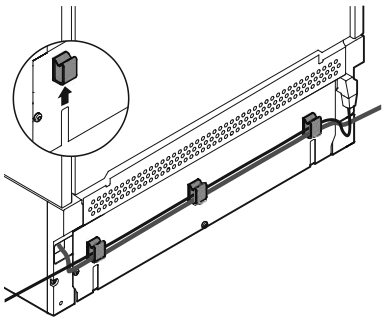

Install the cable holders on the rear of the appliance. Insert mains cable/water line in cable holders.

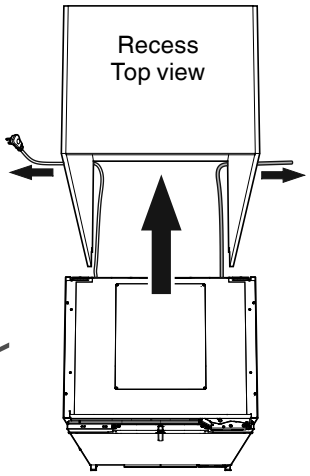

IMPORTANT

After sliding the appliance into the recess, plug in the appliance and check its function. Then unplug it again..

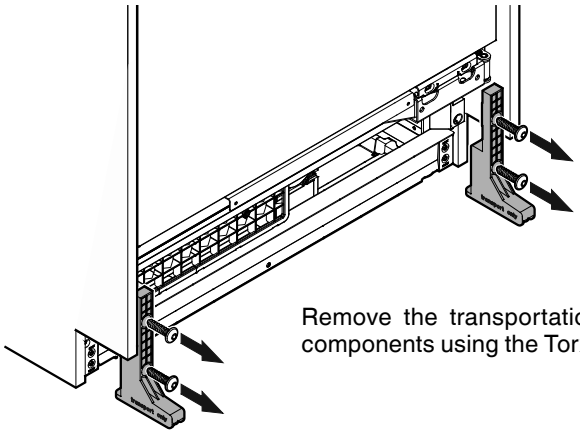

Remove the transportation safety components using the Torx 25 key.

⚠ DANGER!

Risk of death or serious injury due to appliance tipping.

Do not open the appliance door before the height adjustment is finished and the anti-tipping bracket supports the appliance.

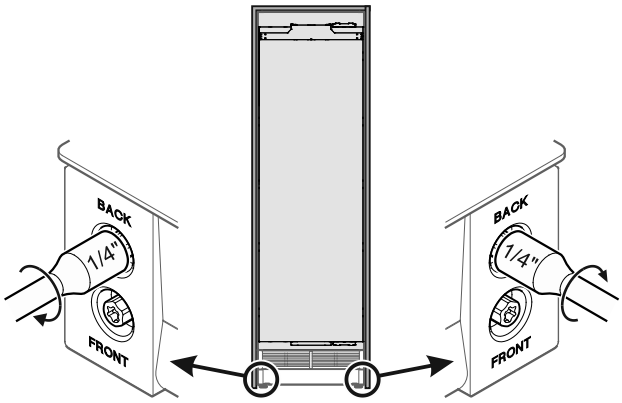

Turn clockwise to raise the appliance.

Raise the appliance evenly by turning the screws successively until the appliance back touches the anti-tipping bracket (lift approx. 6.5 mm).

To attain the minimum base panel height of 102 mm, the adjustable feet must be raised 6 to 8 mm.

Maximum height adjustment of the appliance = 19 mm

IMPORTANT

When turning the screws with an electric screwdriver, please make absolutely sure that:

Maximum rotation speed = 400 rpm
Maximum torque = 1 Nm

Failure to follow this instruction will result in damage to the height adjustment.

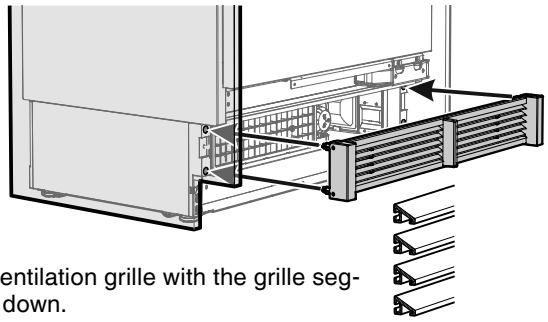

Mount the ventilation grille with the grille segments tilted down.

Remove the depth adjustment aid before fastening the appliance in the recess.

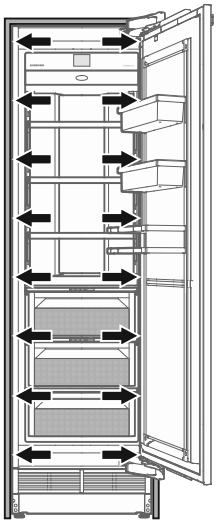

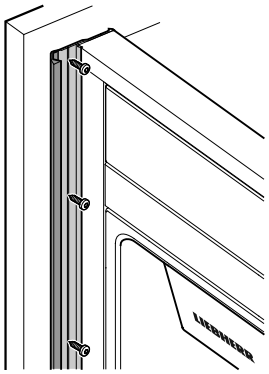

Fasten the appliance in the recess through the appliance cover strips using eight 4 x 14 screws for each side. We recommend that you mark and pre-drill the hole positions in the strip.

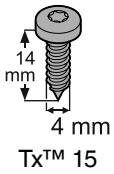

Close the front part of the appliance cover strips.

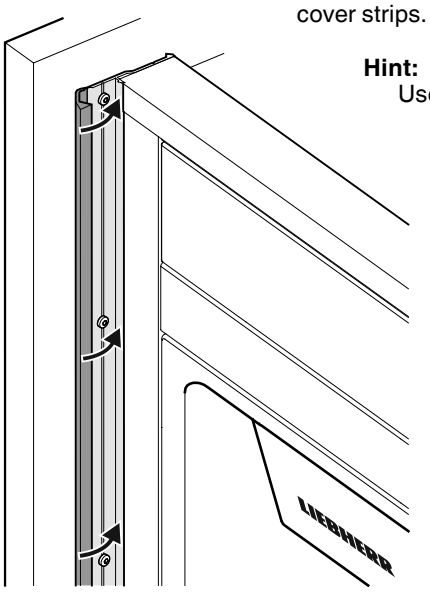

Hint:
Use the removed transportation safety component to help with closing.

Push the mounting strip upwards.

The bottom edge of the mounting strip must be aligned with the top edge of the adjacent unit door.

Internal door panel

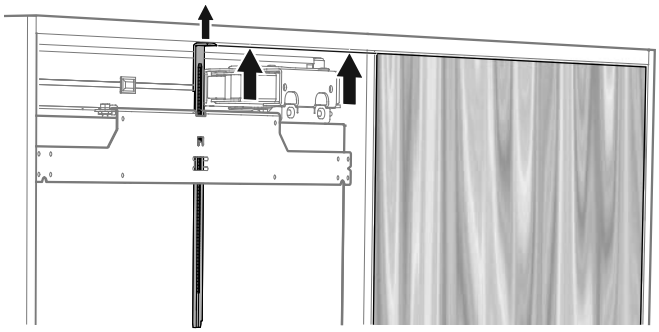

External door panel

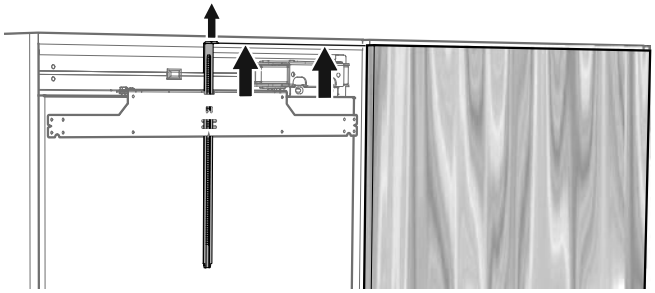

Open the door.
Unscrew the attachment bracket with the mounting strip.

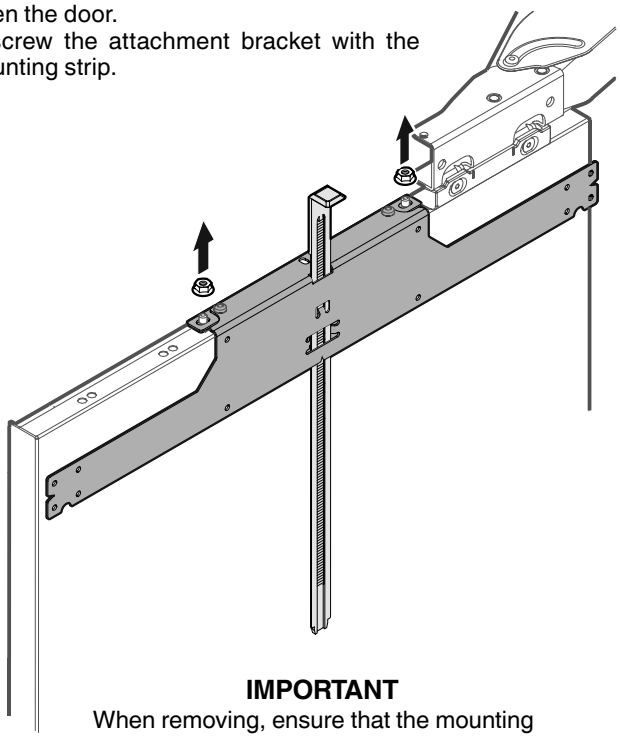

IMPORTANT
When removing, ensure that the mounting strip does not move.

Position the attachment bracket in the middle of the door panel, align horizontally and secure to the door panel using eight 4 x 14 screws.

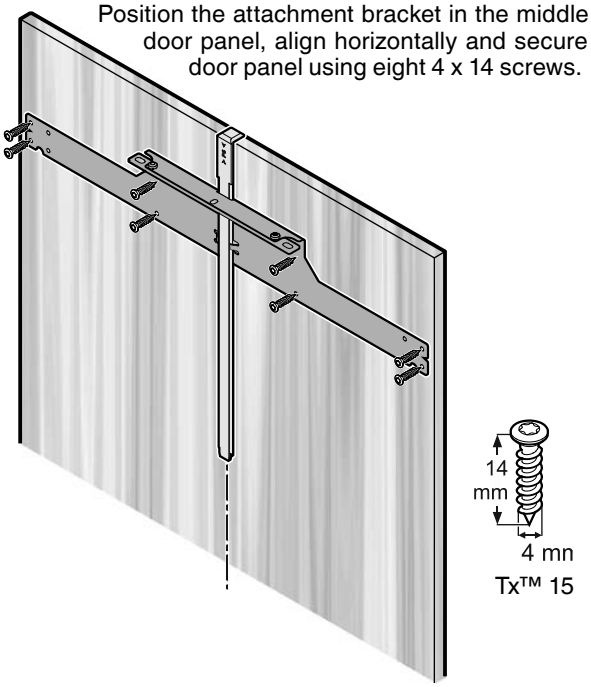

IMPORTANT
Risk of damaging the panel.
Do not undershoot the minimum panel thickness (shaker style).

IMPORTANT
Door handles should be mounted now because the panel support strips will cover the mounting holes.

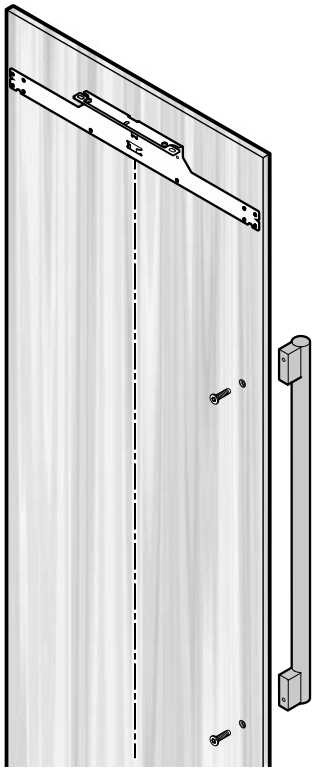

Only use countersunk screws for handle mounting.

The holes should be countersunk.

The screw heads should be flush with the panel.

Position the panel support strips with the top lug in the cut-out of the top attachment bracket.

Align the strips parallel to the side edge of the panel and screw into place with ten 4 x 14 screws.

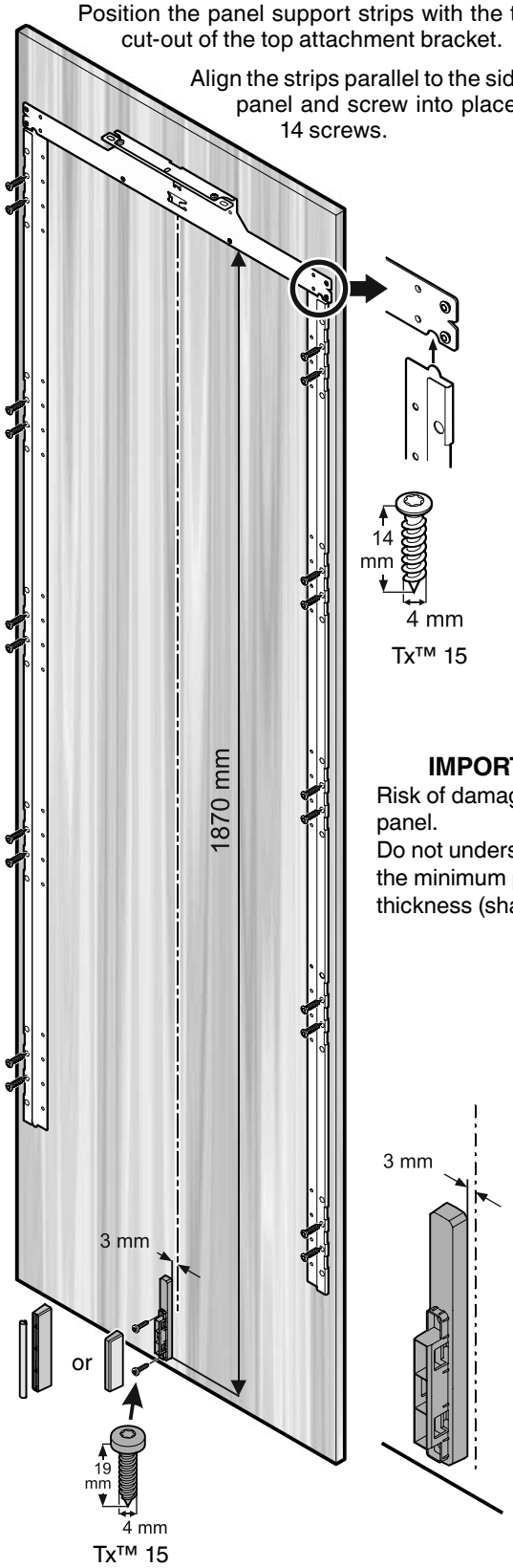

IMPORTANT
Risk of damaging the panel.
Do not undershoot the minimum panel thickness (shaker style).

Mount the ventilation duct divider with two 4 x 19 screws.
Click on the cover.

IMPORTANT
If the door has to be limited to a 90° opening angle, it must be done before the panel is mounted onto the appliance door. See chapter "**Important note for changing over door hinges or limiting the door opening angle to 90°**" on page 41.

Open the appliance door.
Place the door panel on the top adjusting screws and align in the centre.
Screw the hex nuts onto the adjusting bolts and tighten.

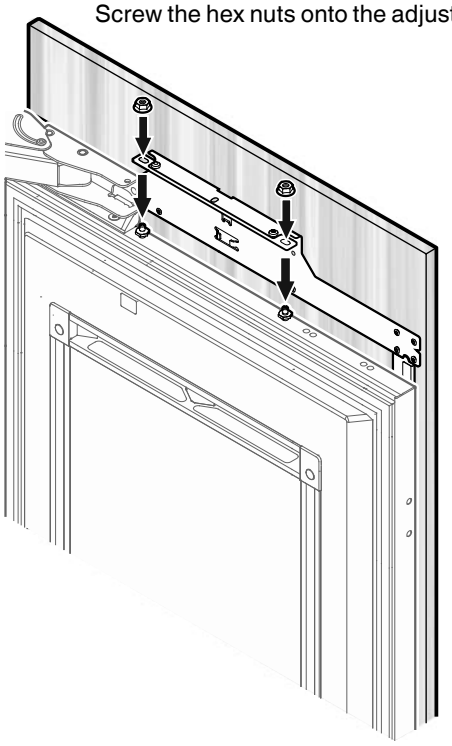

Close the door and check the position of the door panel.

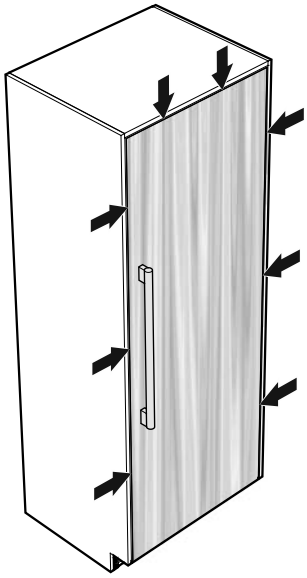

IMPORTANT
After a certain time and loading, it may be necessary to readjust the door.

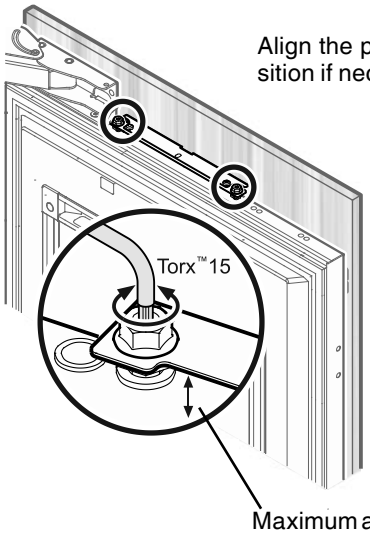

Align the panel in its vertical position if necessary.

Loosen the hex nuts and turn the adusting bolts with the Torx 15 key provided.

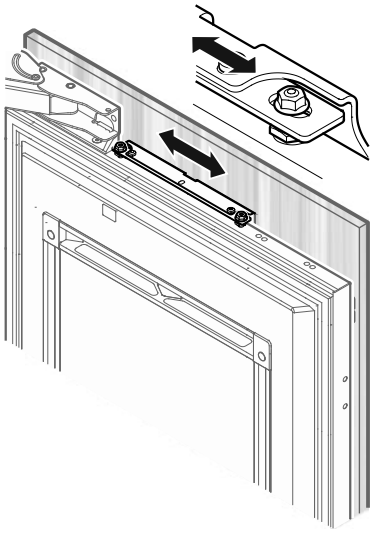

Align the panel horizontally with the long slots in the attachment bracket.

Tighten the securing nuts.

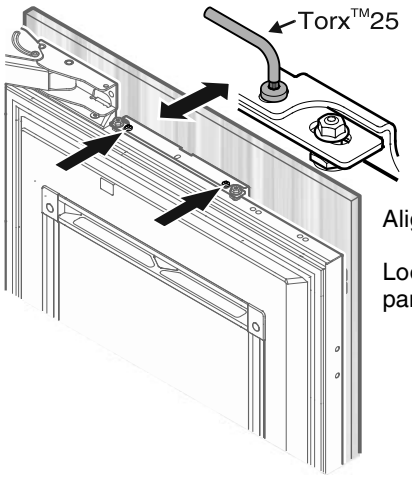

Align the panel in its depth.

Loosen the screws, align the panel and tighten the screws.

Align the panel in its depth at the bottom.

Loosen the screws, align the panel and tighten the screws. Use the Torx 20 key provided.

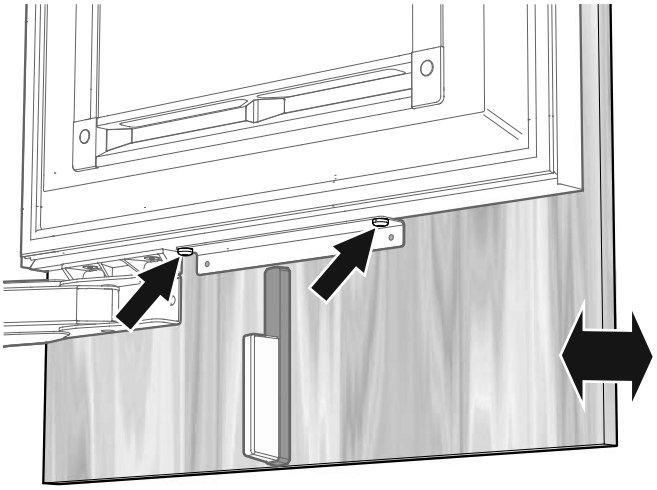

Secure the panel through the bottom attachment bracket with two 4 x 14 screws.

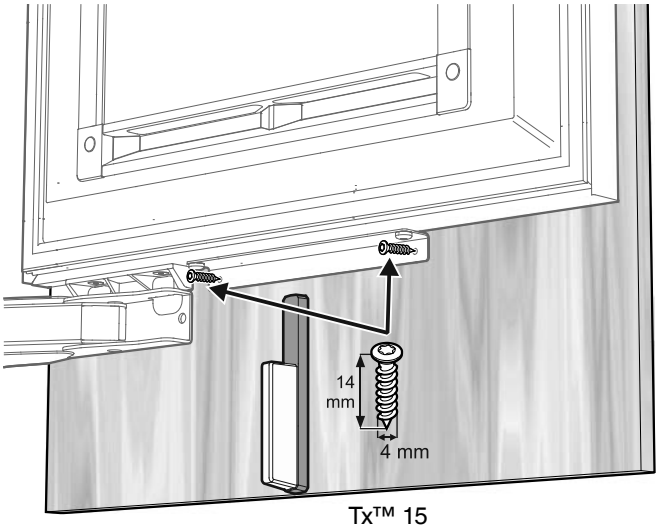

IMPORTANT

Risk of damaging the panel.
Do not undershoot the minimum panel thickness (shaker style).

Insert the panel supports between panel and appliance door and screw into place with two M6 x 12 screws each.

Tx™ 20

Hook the door cover strips to the front of the supports and snap in at the back.

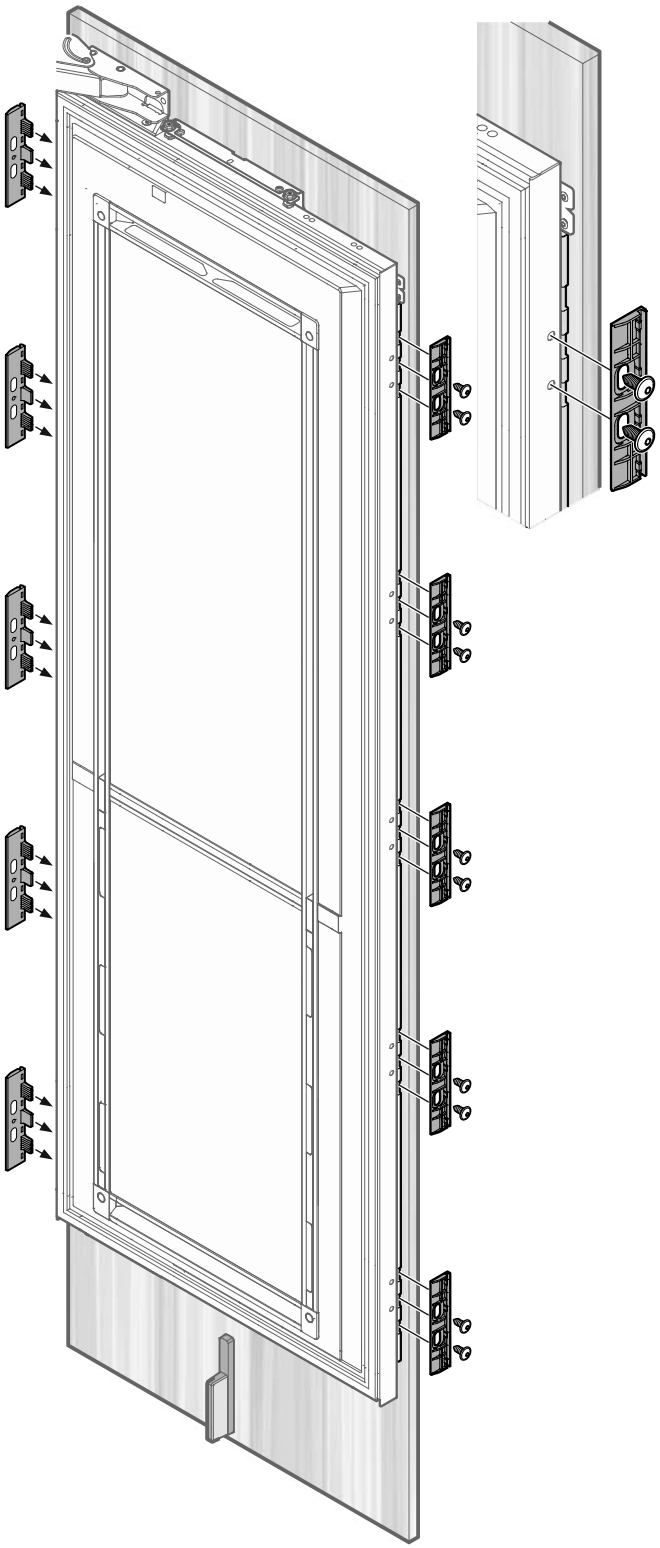

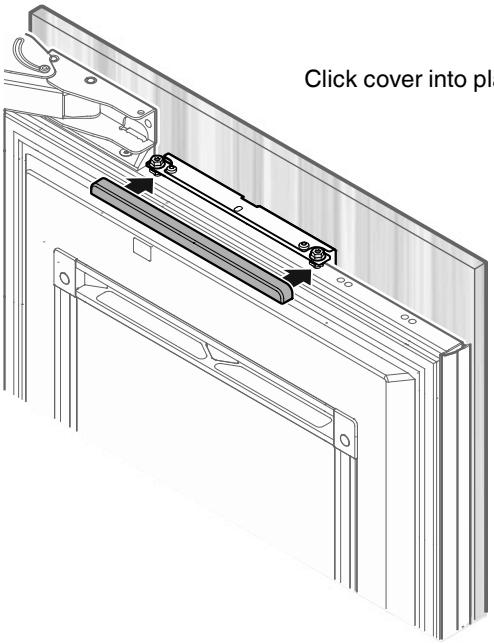

Click cover into place.

Adjust the brackets to the thickness of the plinth panel.

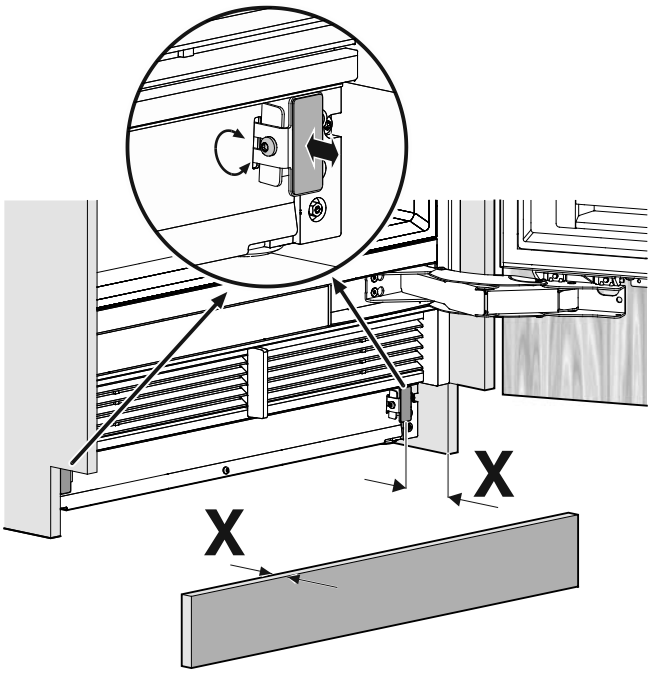

Remove the backing foil and affix the plinth panel.

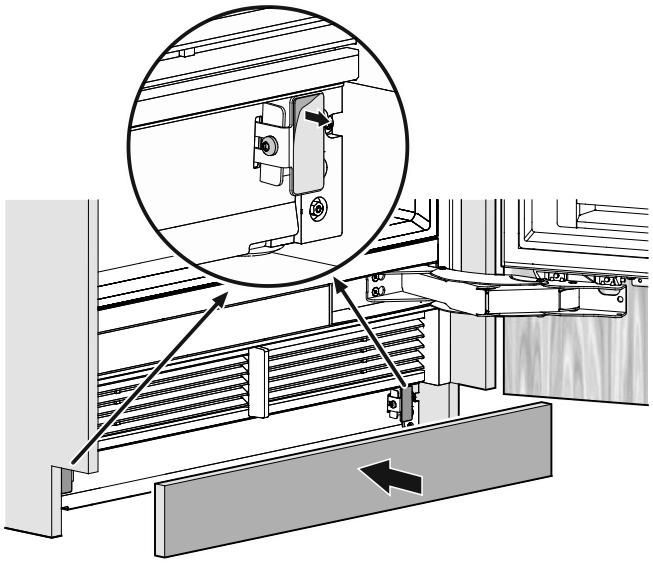

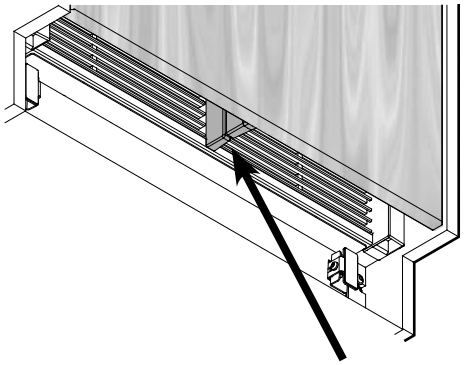

Check that there is no gap between the appliance air divider and the door air divider.

IMPORTANT

There will be a gap if the ventilation grille is fitted incorrectly.

Insert the door racks.

The bottle rack must be in the lowest possible position of the clip-in strip.

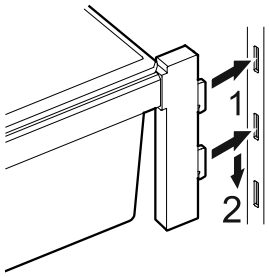

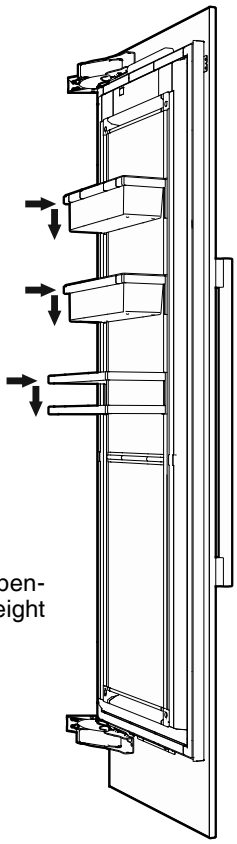

Insert the hooks of the rack into the openings of the clip-in strip at the desired height and push down.

IMPORTANT

Be sure each door rack is fixed properly in the clip-in strip.

Model ERB.. 97.., ERB.. 99..

Open the shut-off valve for the water supply and check the entire water system for leaks.

SmartDeviceBox (not supplied in all countries)

Download the "SmartDevice" app to your mobile device.

Start the app on your mobile device and follow the instructions.

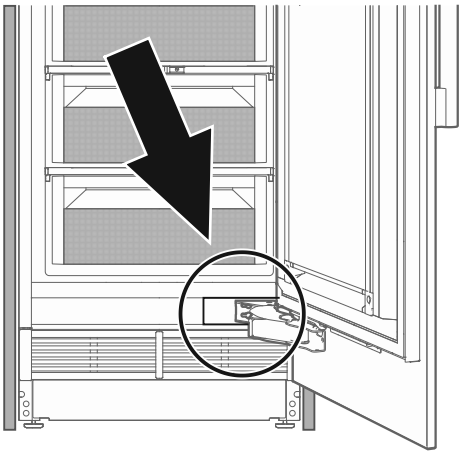

Please note in case of removing appliance from the recess

If the appliance has to be removed from the recess again, please make sure you take account of the following:

1. Empty the appliance.
2. Disconnect the appliance from the mains.
3. Remove the door panel.
4. Lower the appliance using the height adjustment unit.

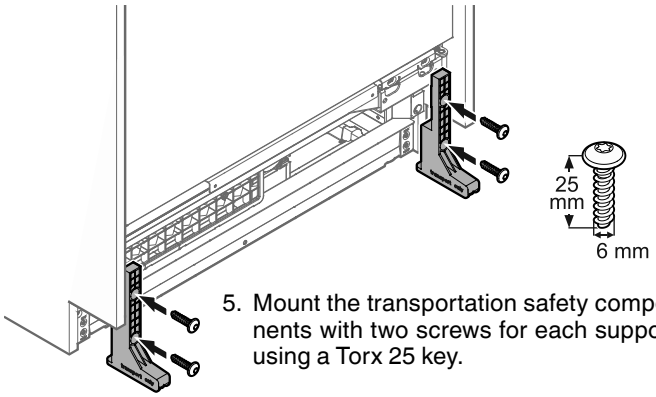

5. Mount the transportation safety components with two screws for each support using a Torx 25 key.

⚠ DANGER!

Risk of death or serious injury due to the appliance tipping over.

Do not remove the appliance without the mounted transportation safety components.

Important note for changing over door hinges or limiting the door opening angle to 90°

Changing the door hinges or limiting the door opening angle to 90° should only be carried out by a trained expert.

The door hinges are fitted with strong closing springs. If the hinge accidentally snaps shut, this can lead to serious injury.

The door itself is very heavy. Do not try to remove the door yourself.

Contact the Liebherr customer service department for more information. See contact details on the back of this manual.

PLEASE READ AND FOLLOW THESE INSTRUCTIONS.

⚠ WARNING!

Do not perform the door-reversal procedure yourself!
This information is intended solely for trained specialist personnel!

These instructions contain Warning notes. This information is important for safe and efficient installation.

Always read and comply with all Warning notes!

⚠ WARNING!

Warning indicates a potentially hazardous situation which, if not avoided, could result in death or serious injury.

IMPORTANT
This indicates information that is especially relevant to a problem-free installation.

The following images are illustrative examples.

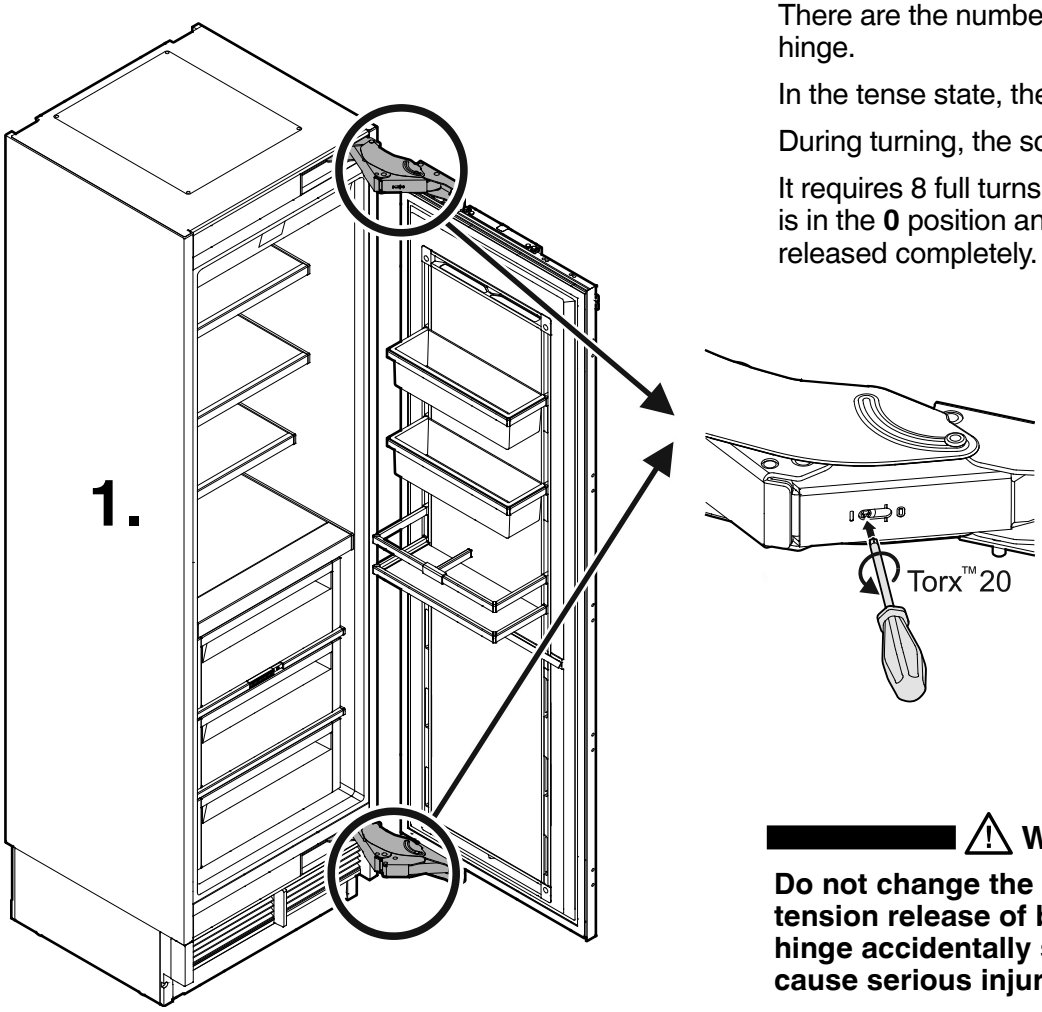

Changing over door hinges

Door hinges should only be changed by a trained expert.

Changing the door hinges must be done by two people.

⚠ WARNING!

The door must be secured to prevent injury and to stop the door falling off.

NOTE
This instruction manual describes how to change over the door hinges from right to left.

The procedure described in this instruction manual can be applied in the opposite direction when changing the hinges from left to right on appliances.

1. Open the appliance door.

Release the spring tension of the top and bottom hinges by turning the indicated screw anti-clockwise.
(Depending on model and options)

There are the numbers **1** and **0** stamped on the hinge.

In the tense state, the screw is in the **1** position.

During turning, the screw moves to the right.

It requires 8 full turns (360° each) until the screw is in the **0** position and the spring tension is released completely.

⚠ WARNING!

Do not change the door hinges without tension release of both hinges. If the hinge accidentally snaps shut, this can cause serious injury to fingers or hands.

⚠ WARNING!

Before performing the next steps, secure the door from falling off.

One person must hold the door permanently when the screws are removed.

Failure to follow these instructions can result in death or serious injury.

2. Close the appliance door.

   Remove the screws of the bottom angle bracket.

3. Remove the screws of the top angle bracket.

   Remove the appliance door.

IMPORTANT
The screws are needed to mount the hinges on the opposite side again.

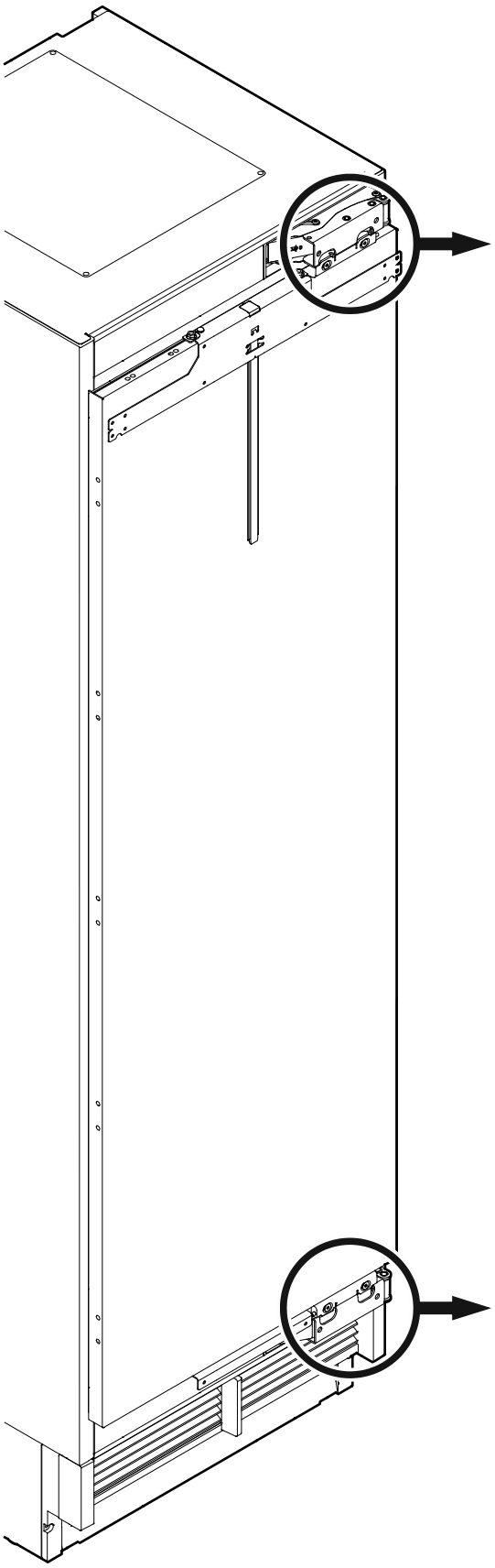

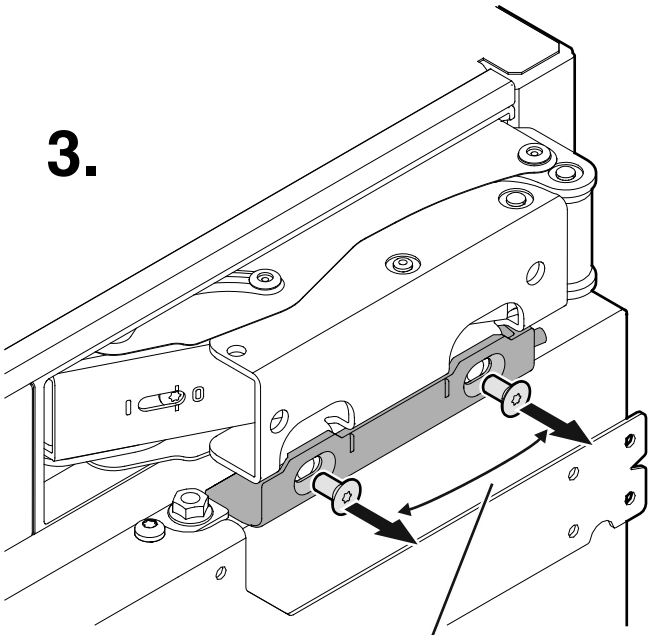

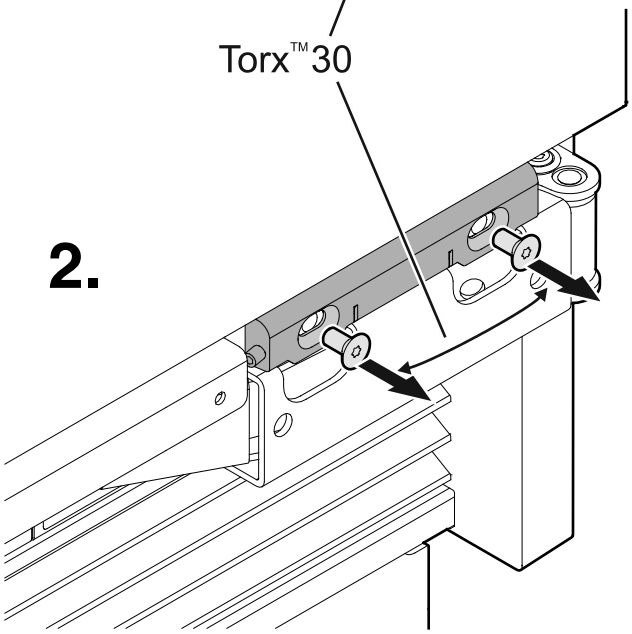

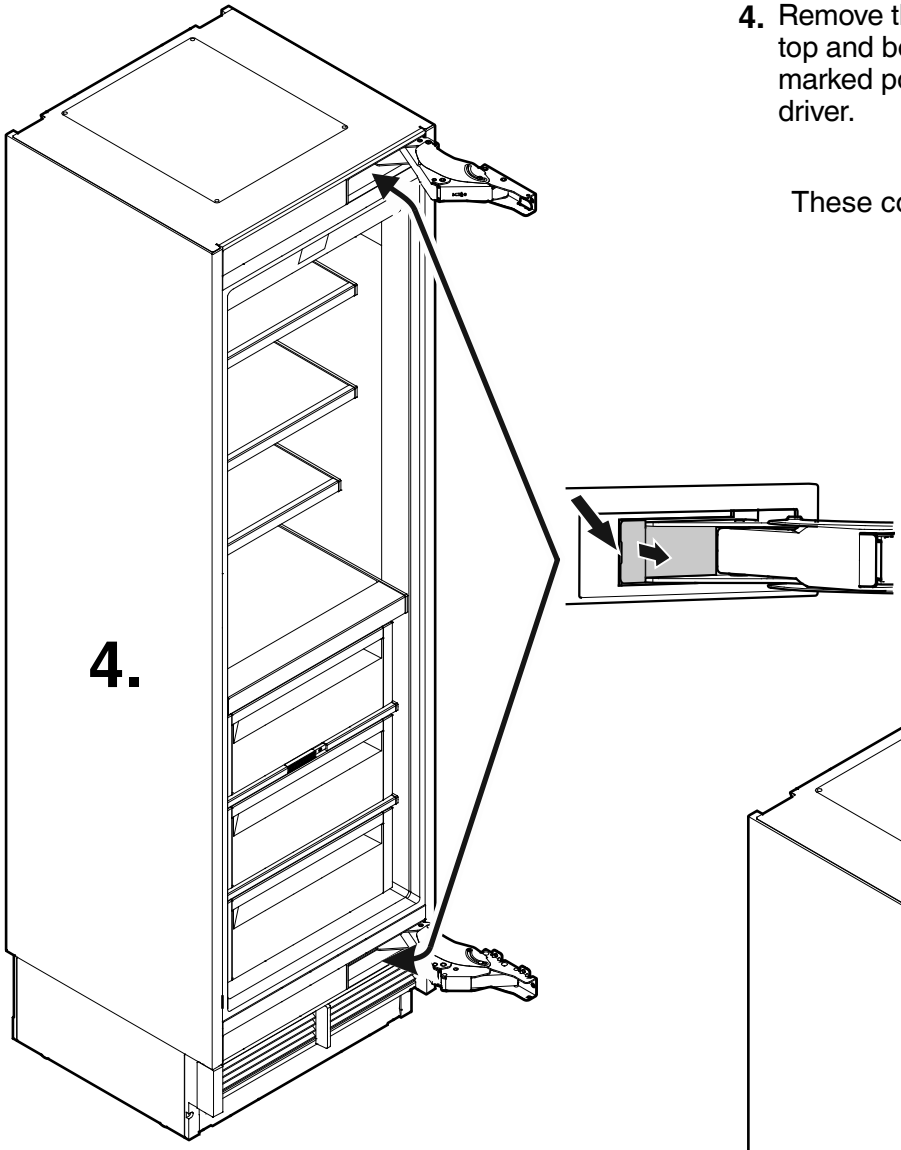

4. Remove the covers inside the opening of the top and bottom hinge. Unclip the covers at the marked position using a small flat-blade screw-driver.

NOTE
These covers can be reused in the opposite position.

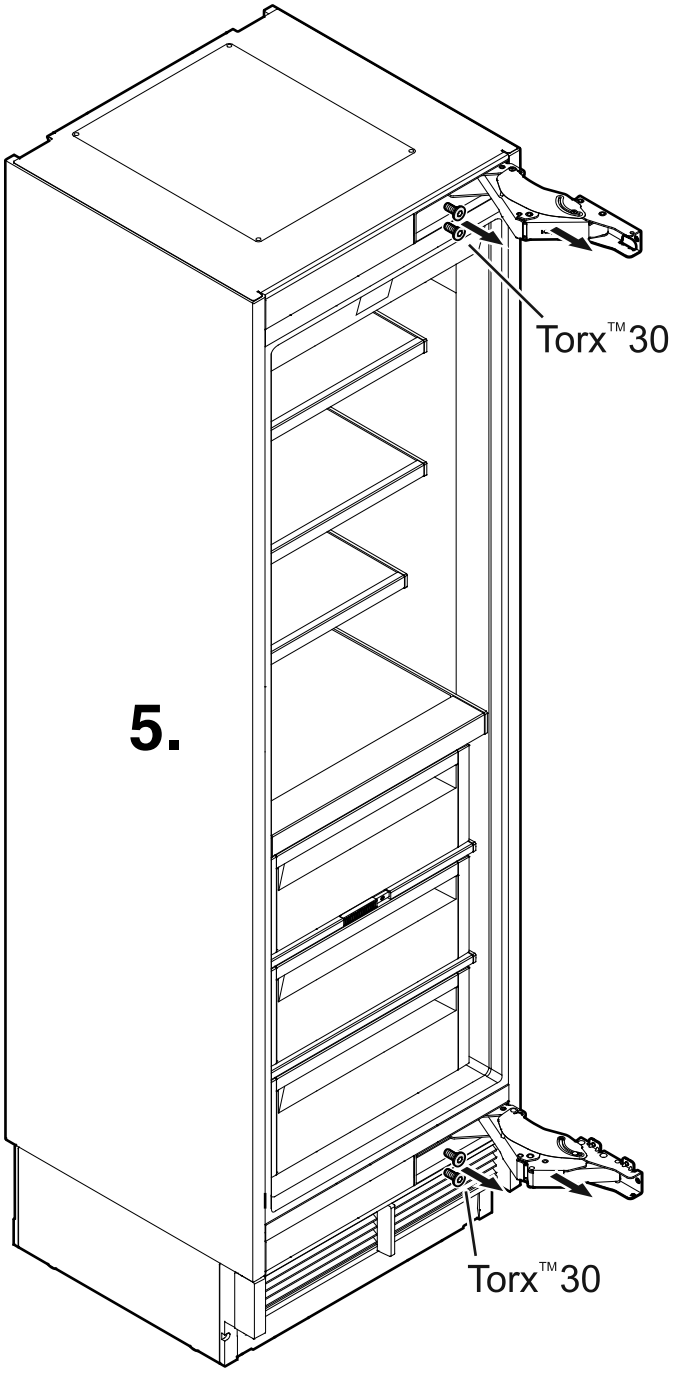

5. Unscrew both hinges.

IMPORTANT
The screws are needed to mount the hinges on the opposite side again.

6. Remove the top covers. Unclip the covers at the marked position using a small flat-blade screwdriver.

NOTE
These covers can be reused in the opposite position.

7. Remove the bottom cover. Unclip the cover at the marked position using a small flat-blade screwdriver.

NOTE
This cover can be reused in the opposite position.

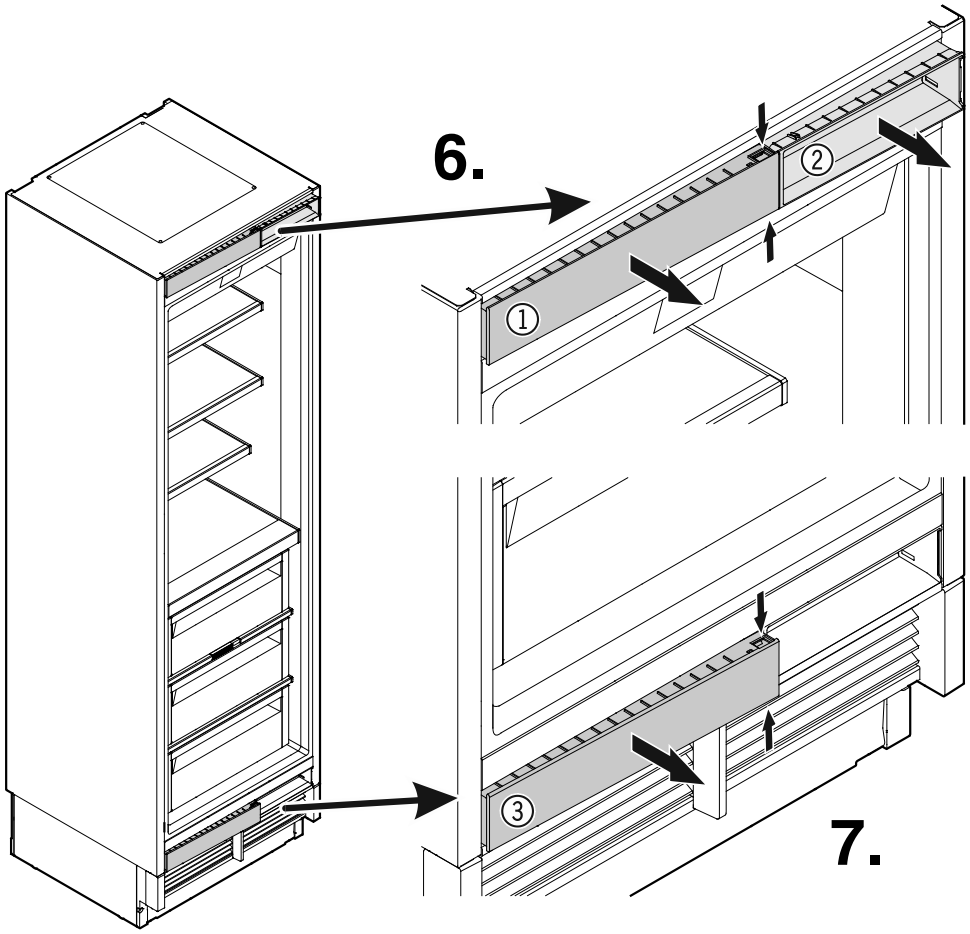

8. Remove the bracket (5) and cover (4) and turn them by 180°.

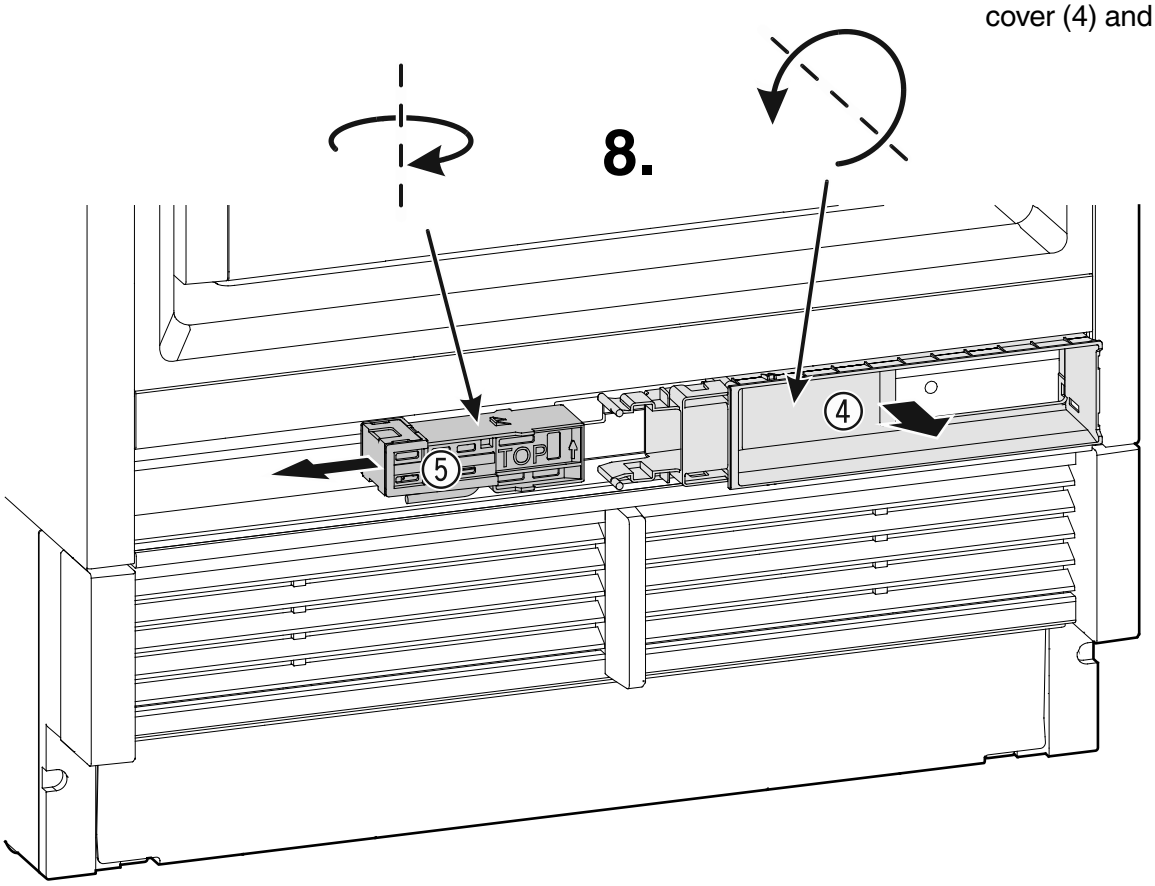

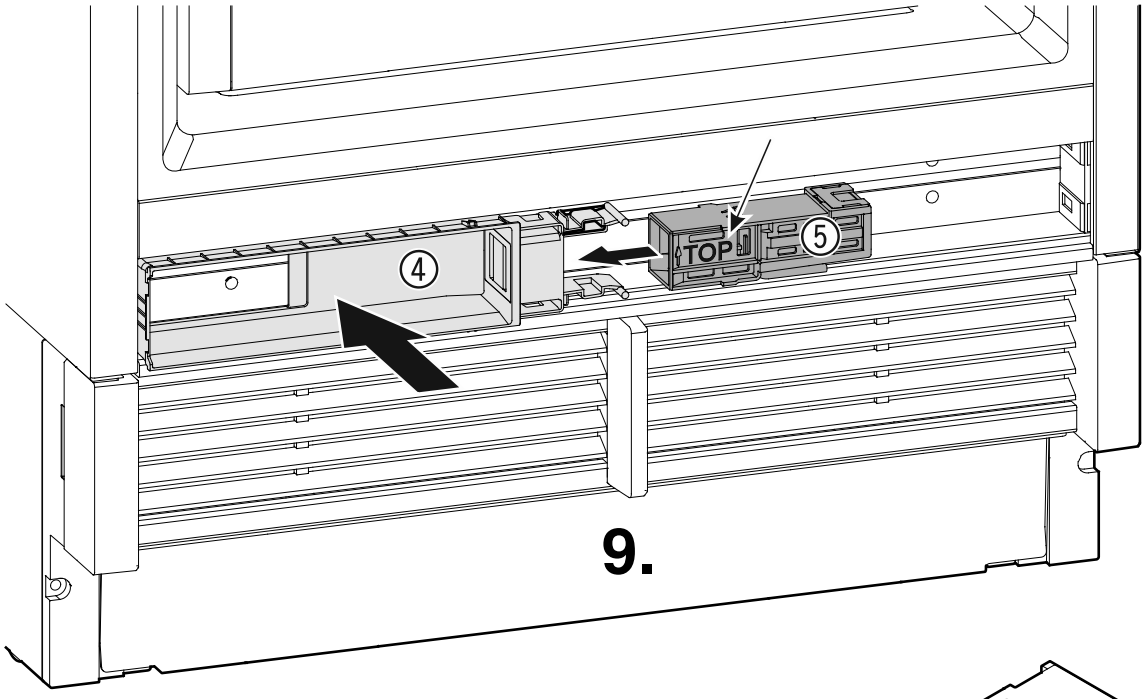

9. Mount the cover (4) on the left side.
Mount the bracket (5); the text "TOP" must be readable.

10. Click covers into place.

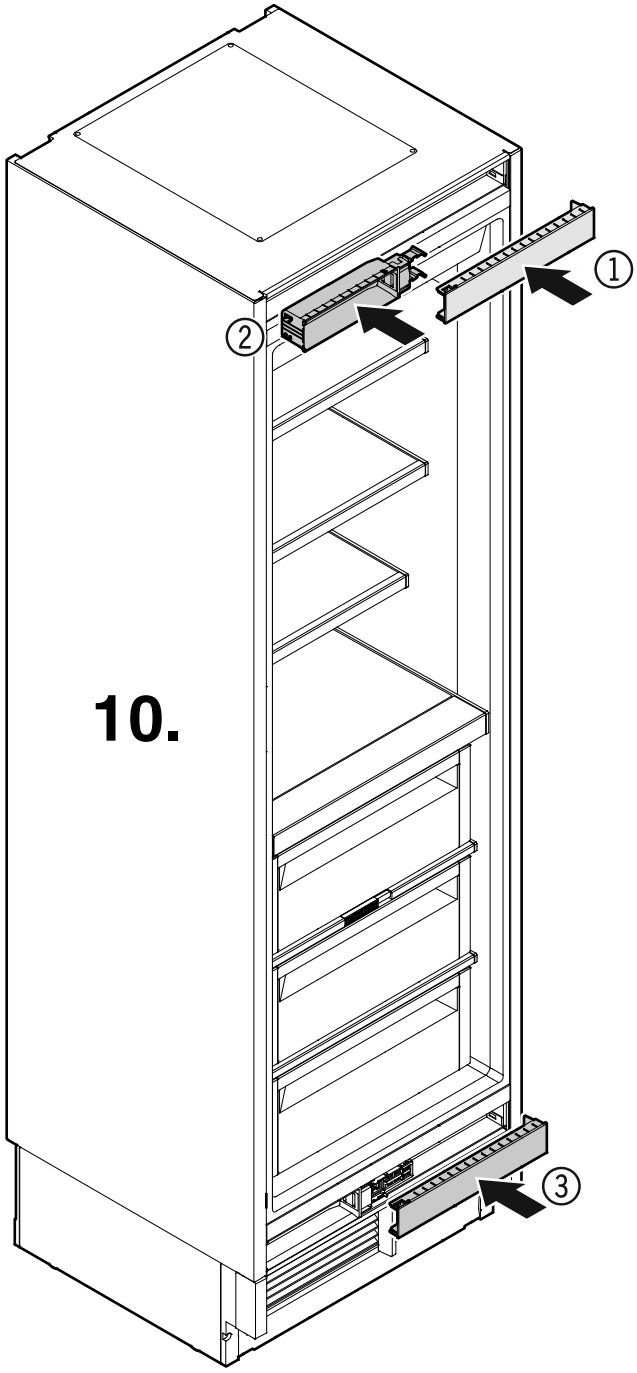

11. Screw the hinge, removed from bottom right, into place on top left. Use the screws removed in step 5.

Front view of hinge

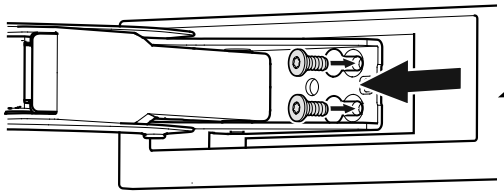

To screw on the hinge correctly, the fastening holes of the hinge must be in line with the bolt holes of the appliance housing.

12. Screw the hinge, removed from top right, into place on bottom left. Use the screws removed in step 5.

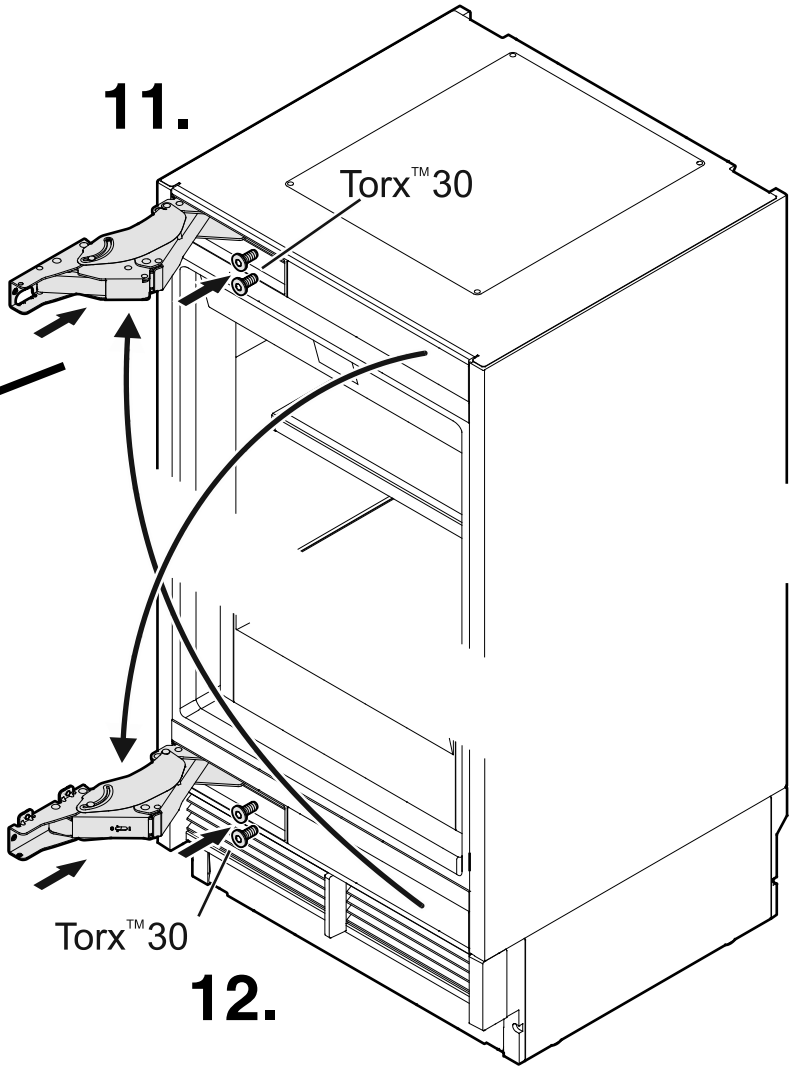

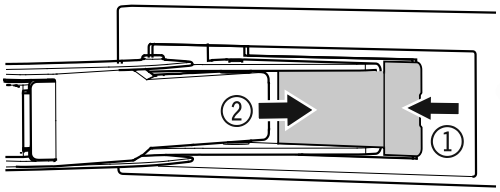

13. Attach the covers into the opening of the top and bottom hinge. Hook in the cover on the right (1) and click into place on the left (2).

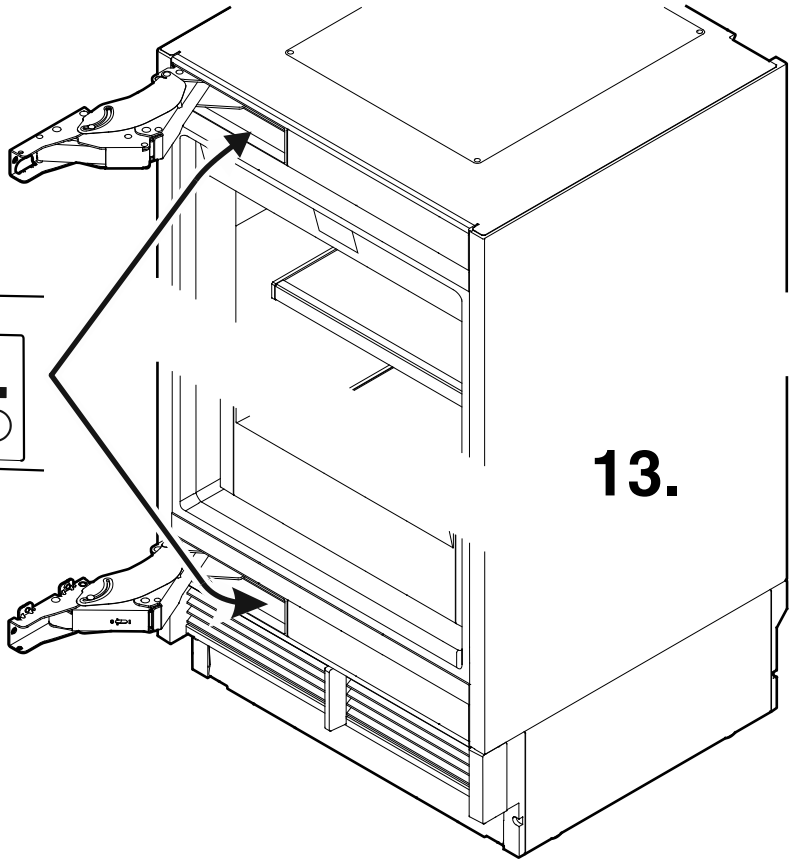

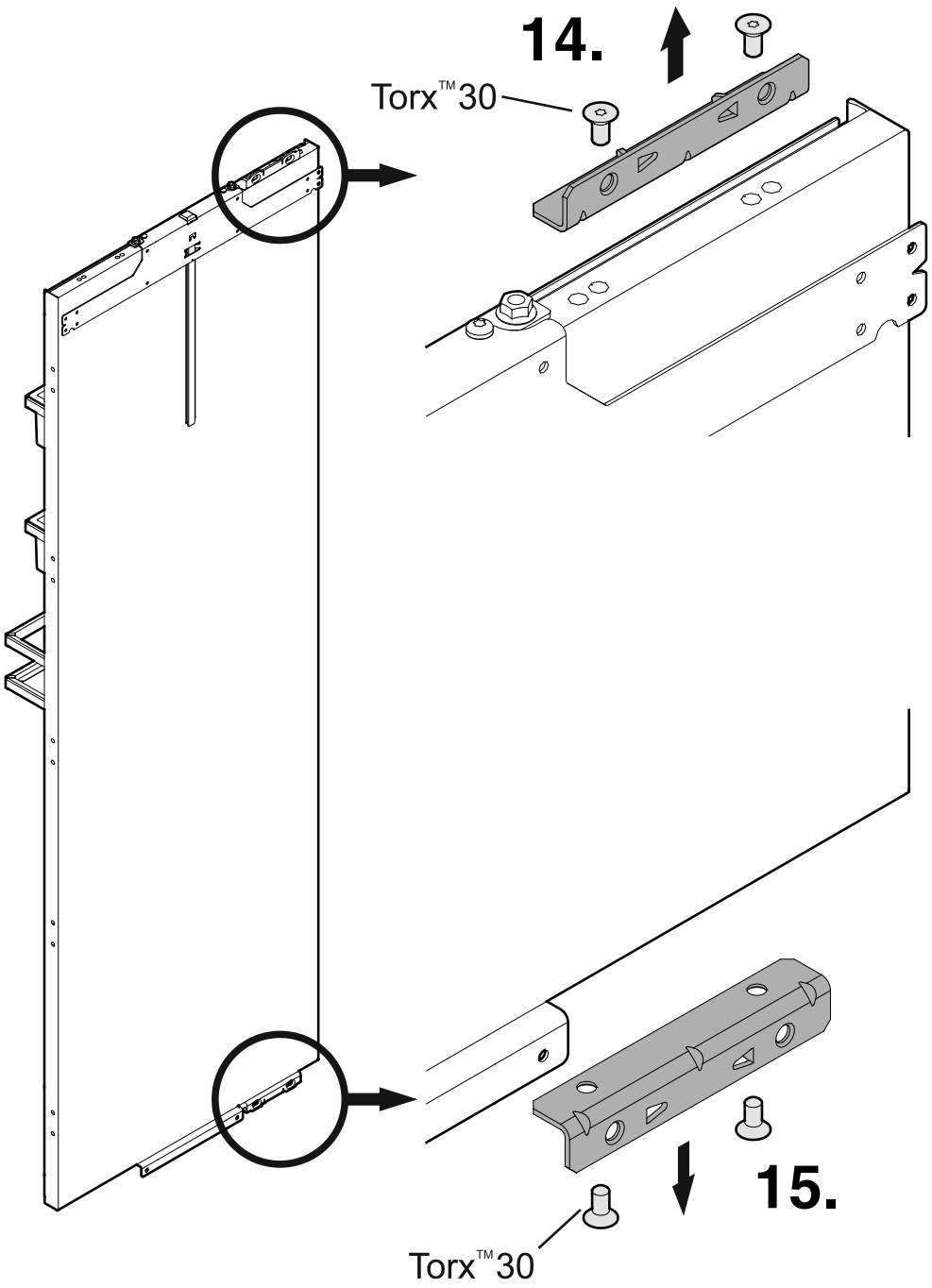

14. Unscrew the top angle bracket of the appliance door.

15. Unscrew the bottom angle bracket of the appliance door.

16. The brackets are mounted on the opposite side using the screws removed in step 14.

17. The brackets are mounted on the opposite side using the screws removed in step 15.

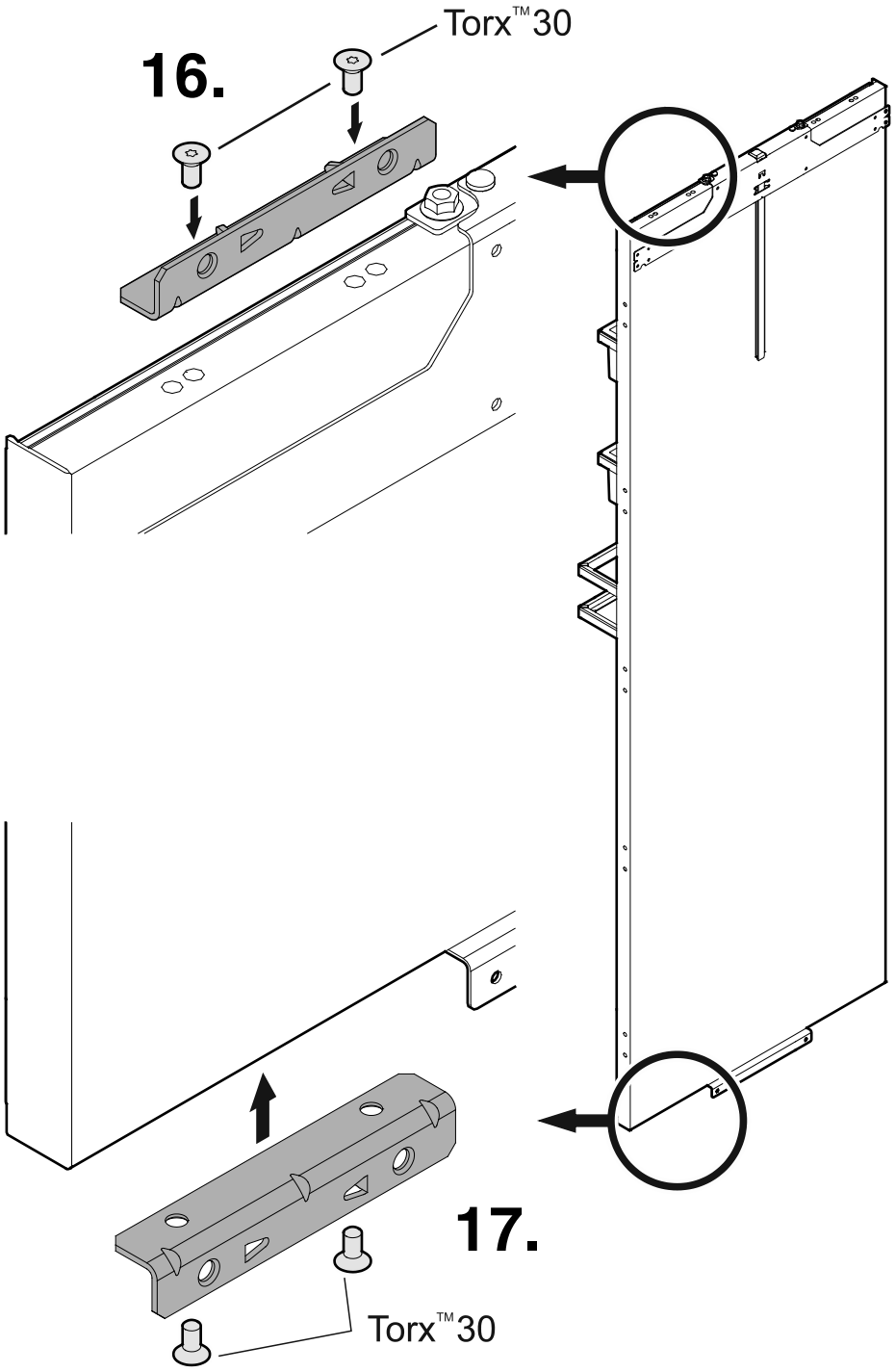

18. Connect the appliance door to the hinges using the screws removed in steps 2 and 3.

Turn in the screws through the top and bottom angle bracket.

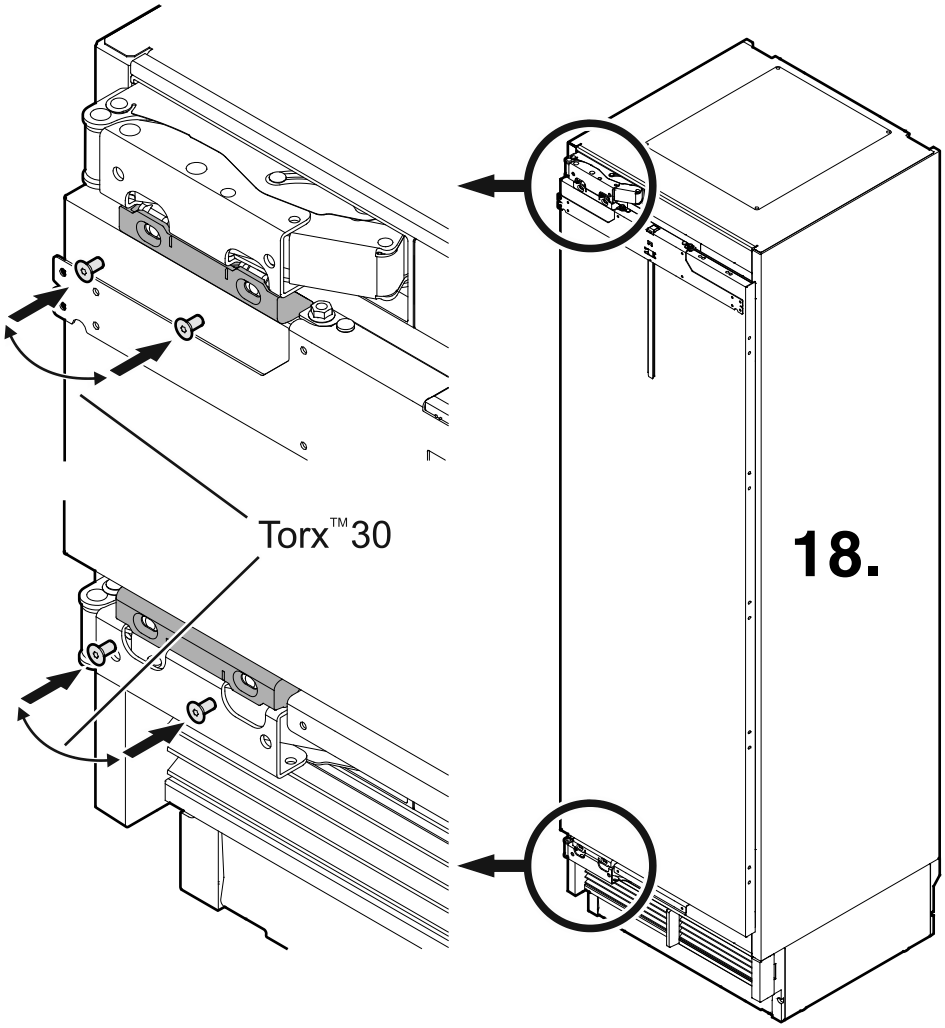

19. Open the appliance door.

Turn the tensioning screw of both hinges clockwise as far as it will go (8 turns). (Depending on model and options)

Be sure to continue until the screw can no longer turn to provide the correct spring tension in the hinges to allow the door to seal correctly when closed.

The door hinges have now been changed over.

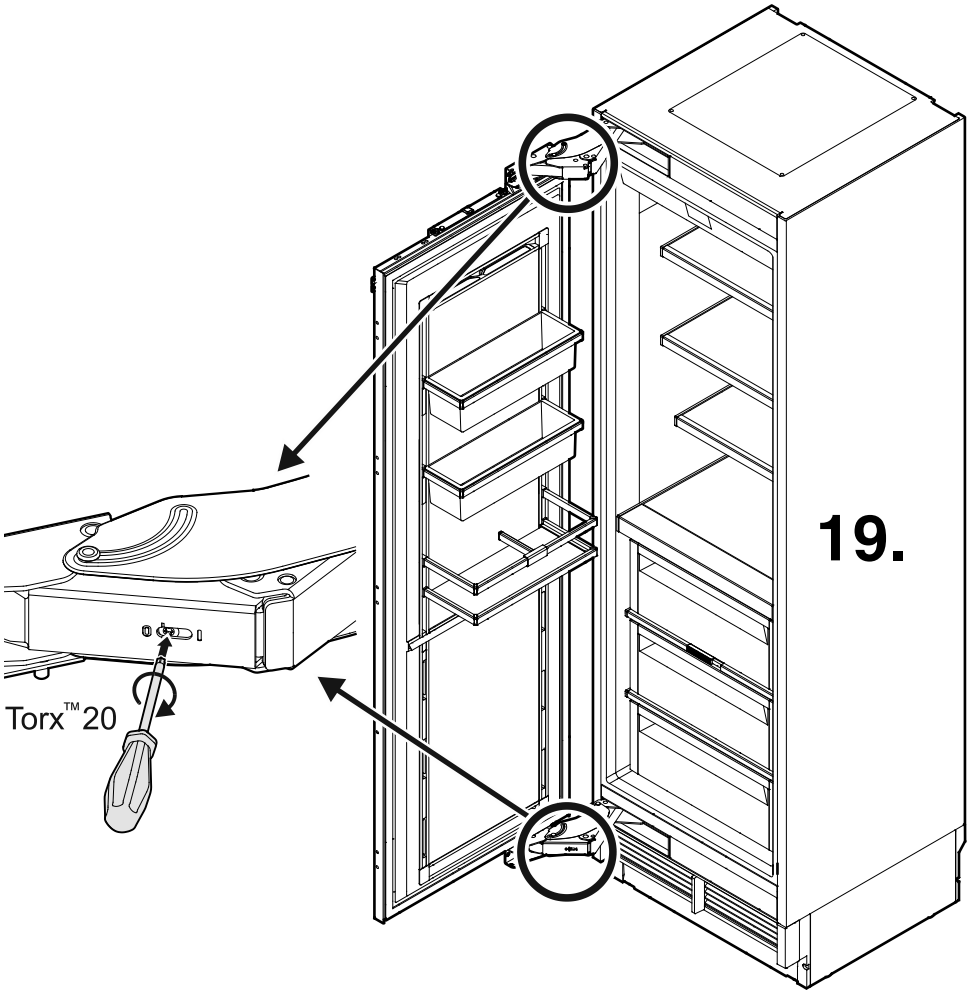

Liebherr Hausgeräte Lienz GmbH
Dr.-Hans-Liebherr-Strasse 1
A-9900 Lienz
Österreich
www.liebherr.com